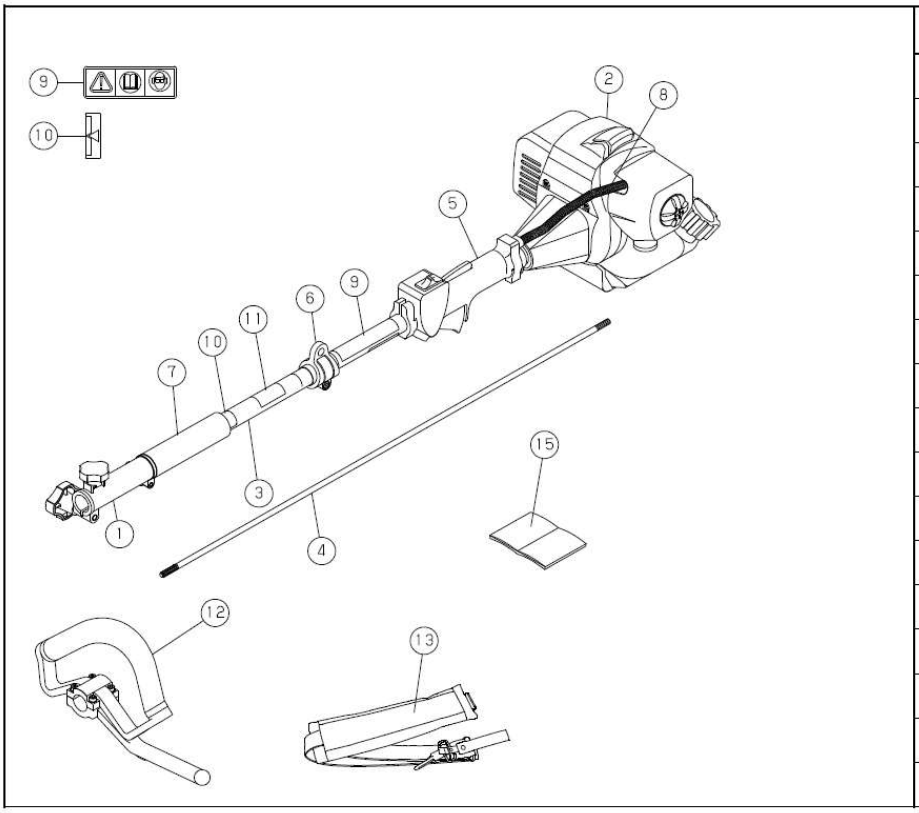

No.	CODE	ITEM	QTY
1	DP1-0002000	JOINT ASSY	1
2	R003-008300	ENGINE	1
3	R210-00270B	PIPE ASSY	1
4	R210-00260B	DRIVE SHAFT	1
5	R034-005700	THROTTLE LEVER	1
6	R039-002800	HANGER ASSY	1
7	G035-000050	GRIP	1
8	G013-070050	CORRUGATED TUBE	1
9	G052-003980	CAUTION LABEL	1
10	G052-001850	POSITION LABEL	1
11	G051-007120	NAME LABEL	1
12	R210-001800	LOOP HANDLE ASSY	1
13	R039-003000	STRAP	1
14	R208-000200	GOGGLES	1
15	R180-DP1005	MANUAL	1

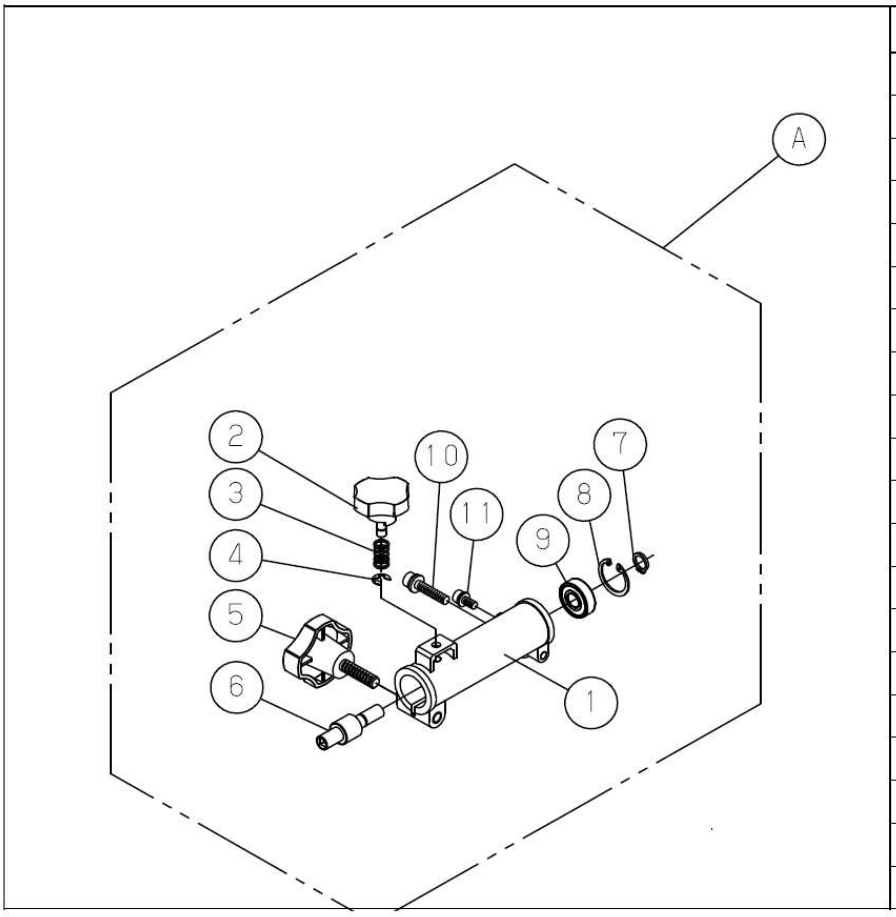

No.	CODE	ITEM	QTY
A	DP1-0002000	JOINT ASSY	1
1	R210-005100	JOINT	1
2	DP1-0004000	KNOB,DOWEL PINS	1
3	G002-000410	SPRING	1
4	K280-005000	SNAP RING E-5	1
5	G055-000010	KNOB BOLT	1
6	DP1-A002000	JOINT SHAFT ASSY	1
7	K283-009000	SNAP RING STW9.0	1
8	K282-024000	SNAP RING RTW24.0	1
9	K353-060900	BEARING ZZ609	1
10	K078-060303	BOLT M6×30	1
11	K081-050123	BOLT M5×12	1