STIGA

Estate 598e (2026)

2T2805481/ST1

Spare parts list
Reservdelar
Repuestos
Ersatzteile
Pièces détachées
Reserve onderdelen
Catalogo ricambi

● Use ST. S.p.A. Genuine Spare Parts specified in the parts list for repair and/or replacement.
● The contents described in the parts list may change due to improvement.
● The drawings of the spare parts are only indicative And might Not represent the part in question exactly.
● The indications "right" - "left" - "front" - "rear" refer to the position of the operator when using the machine.
● When placing orders of parts for repair And/Or replacement, make sure that the illustrated parts list Is the one applying to the machine's year of manufacture, as shown on the identification plate attached to the machine.

All rights reserved. No part Of this material may be reproduced Or transmitted, in any form Or by any means, electronic Or mechanical, including photocopying, recording Or by any information storage And retrieval system, without permision in writing from ST. S.p.A.

Copyright ST. S.P.A.

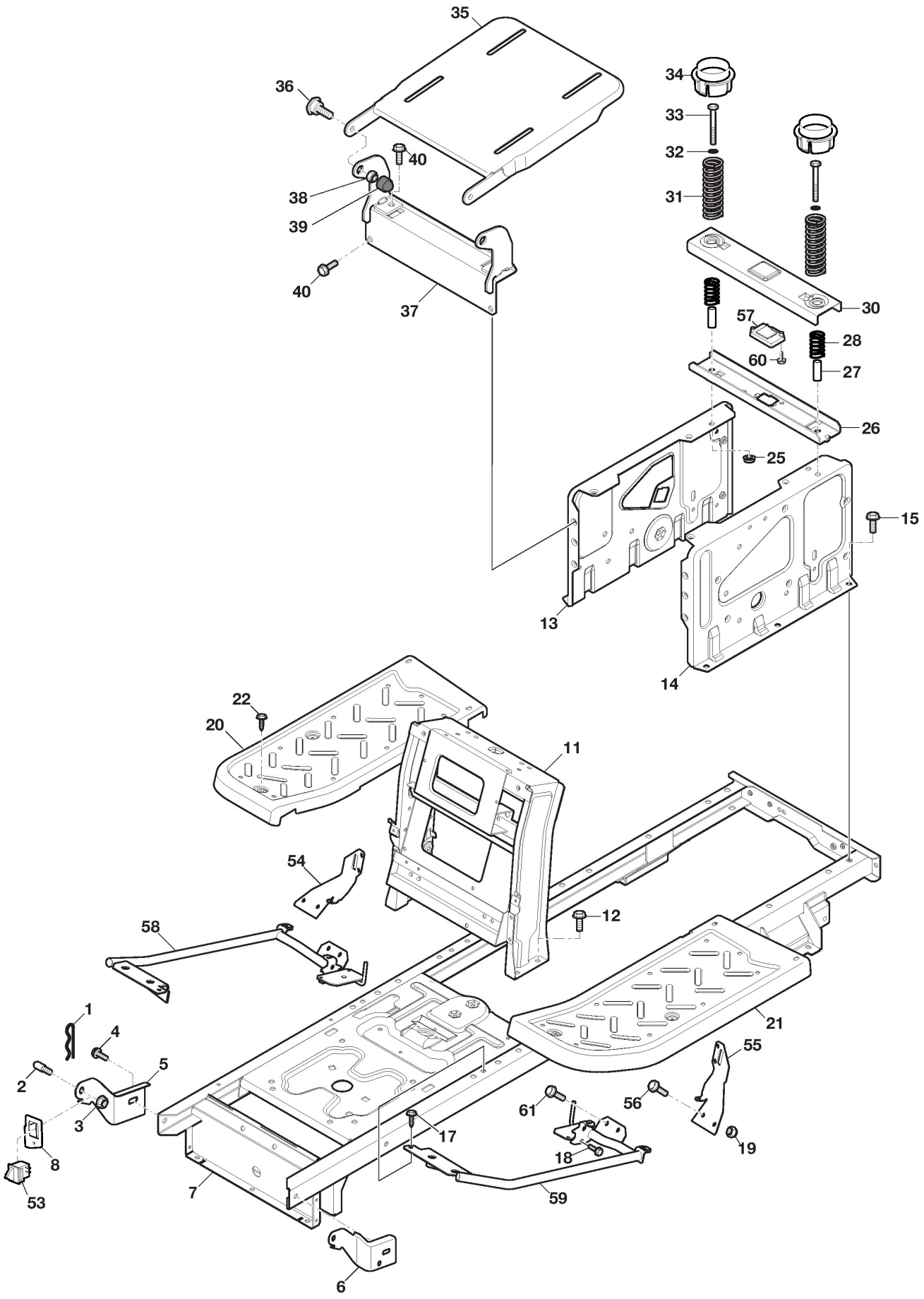

Copyright ST. S.P.A.

Frame

Ref.nr.	Qty	Item number	Description	Notes	From	Up to
1	1	124487998/0	Cotter Pin			
2	2	125510229/0	Bonnet Pin (D Shape)			
3	14	112155000/0	Self-locking nut - M8			
4	2	112735599/0	Screw			
5	1	325547533/0	Right Hood Support Plate			
6	1	325547535/0	Left Hood Support Plate			
7	1	382800221/0	Chassis Frame			
8	1	325774855/0	Micro Switch Support			
11	1	382785313/5	Steering Column Support			
12	4	112792611/0	Screw			
13	1	325785331/2	Right Seat Support			
14	1	325785333/2	Left Seat Support			
15	6	125943009/0	Screw			
17	2	125943009/0	Screw			
18	2	125943009/0	Screw			
19	2	112155000/0	Self-locking nut - M8			
20	1	325500050/2	Right Footboard			
21	1	325500051/2	Left Footboard			
22	2	112735599/0	Screw			
25	2	112293201/0	Nut			
26	1	325820109/1	Seat Support			
27	2	125160048/0	Spacer			
28	2	125430263/0	Spring			
30	1	325820113/0	Seat Switch Support Bar			
31	2	125430264/1	Spring			
32	2	112521350/0	Washer			
33	2	112691400/0	Screw			
34	2	325600148/0	Hood			
35	1	382547061/1	Plate			
36	2	122524970/3	Pin			
37	1	382820151/3	Seat Support			
38	2	112155010/0	Nut			
39	2	118203854/0	Cap			
40	4	112792611/0	Screw			
53	4	119410633/0	Seat Microswitch			
54	1	325650155/2	Support			
55	1	325650157/2	Support			
56	6	125943009/0	Screw			
57	1	325785379/1	Support			
58	1	382785223/2	Footboard Support			
59	1	382785221/2	Footboard Support			
60	2	112728697/0	Screw - Torx PT K50x16			
61	6	112793102/0	Screw - HEX M8x20			

Copyright ST. S.P.A.

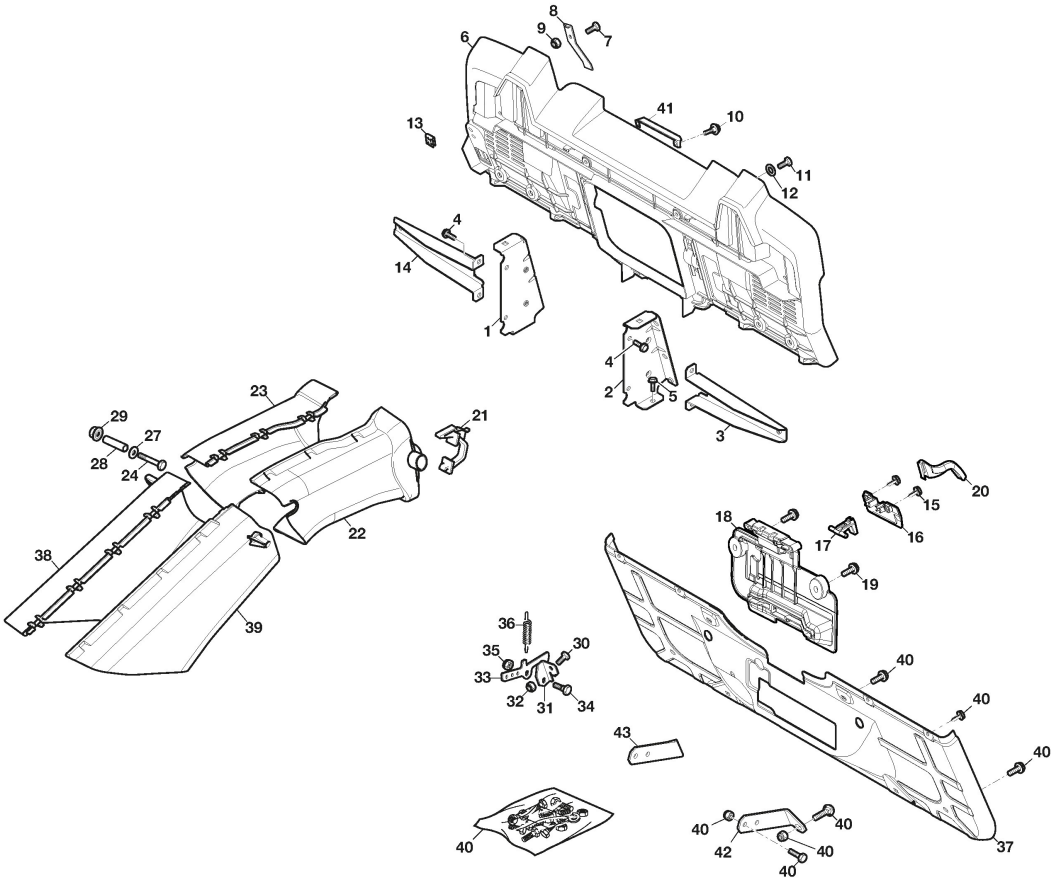

Copyright ST. S.P.A.

Chassis

Ref.nr.	Qty	Item number	Description	Notes	From	Up to
1	1	325774501/2	Right Clamp Bracket			
2	1	325774507/2	Left Clamp Bracket			
3	1	325650163/0	Stiffening			
4	8	125943009/0	Screw			
5	2	125943009/0	Screw			
6	1	325547299/2	Rear Plate, Upper Part			
7	1	125943009/0	Screw			
8	1	127430600/0	Spring			
9	1	112154330/0	Nut			
10	3	125943010/0	Screw			
11	6	125943009/0	Screw			
12	6	112523020/0	Washer			
13	6	112437503/0	Plate			
14	2	325650163/0	Stiffening			
15	2	112728697/0	Screw - Torx PT K50x16			
16	1	325109522/0	Protection Cover			
17	1	325318276/0	Gearshift			
18	1	325785428/1	Support			
19	2	125943010/0	Screw			
20	1	325318277/0	Lever	Also on endowment p40		
21	2	325774499/0	Clamp			
22	1	325108057/0	Conveyor			
23	1	325108056/0	Conveyor			
24	2	112792425/0	Screw			
27	2	112521340/0	Washer			
28	2	125160109/0	Spacer			
29	2	112154510/0	Self-locking nut - M6			
30	1	112789021/0	Screw			
31	1	325755061/0	Bracket			
32	1	112154330/0	Nut			
33	1	325774533/0	Clamp			
34	1	125510080/2	Pin			
35	1	112154510/0	Self-locking nut - M6			
36	1	125430282/1	Spring			
37	1	382547071/1	Rear Plate, Lower Part			
38	1	325108064/0	Conveyor			
39	1	325108065/0	Conveyor			
40	1	382180203/0	Screw Assembly Kit-Rear Plate			
41	1	325600107/0	Micro Protection			
42	1	325650211/0	Rigjht Rear Support Bracket			
43	1	325650213/0	Left Rear Support Bracket			

Copyright ST. S.P.A.

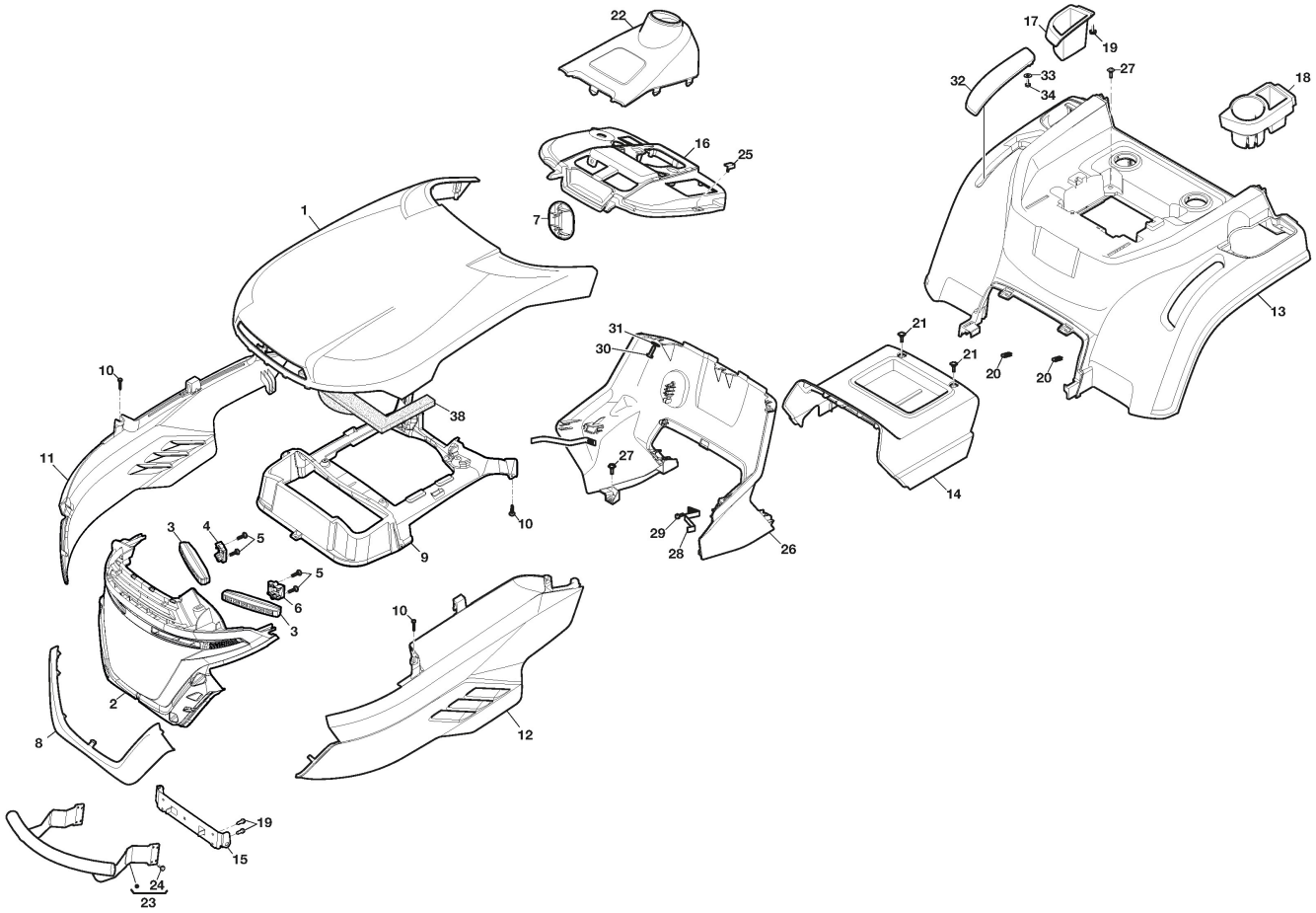

Copyright ST. S.P.A.

Bodywork

Ref.nr.	Qty	Item number	Description	Notes	From	Up to
1	1	325077038/0	Upper Engine Hood, Yellow			
2	1	325077052/0	Black Front Hood			
3	2	384183051/0	Led Bar Headlight Ass.Y			
4	1	325100806/0	Right Light Locking Plate			
5	4	112728706/0	Screw - Torx PT K40x16			
6	1	325100807/0	Left Light Locking Plate			
7	1	325207296/0	Slot Cover			
8	1	325077054/0	Lower Hood, Front	Black		
9	1	325077053/0	Upper Hood Reinforcement			
10	16	112728697/0	Screw - Torx PT K50x16			
11	1	325207326/0	Bonnet Right Side Cover, Black	Black		
12	1	325207327/0	Bonnet Left Side Cover, Black	Black		
13	1	325110537/3	Yellow Wheels Cover			
14	1	325110547/1	Black Central Cover			
15	1	325785633/0	Hood Support			
16	1	325120305/0	Dashboard			
17	1	325207198/1	Cover			
18	1	325207199/1	Cover			
19	4	112735402/0	Screw			
20	2	112437503/0	Plate			
21	4	125943010/0	Screw			
22	1	325120304/0	Dashboard			
23	1	382869037/0	Muffler Protection			
24	1	112735599/0	Screw			
25	2	325260003/0	Grommet			
26	1	325785298/0	Dashboard Support			
27	4	125943010/0	Screw			
28	2	325270325/0	Guide			
29	6	112735599/0	Screw			
30	3	112735406/0	Screw			
31	3	112523040/0	Washer - M6			
32	1	325207203/1	Cover			
33	4	112523050/0	Washer			
34	6	112735402/0	Screw			
38	1	117209683/0	Sponge			

Copyright ST. S.P.A.

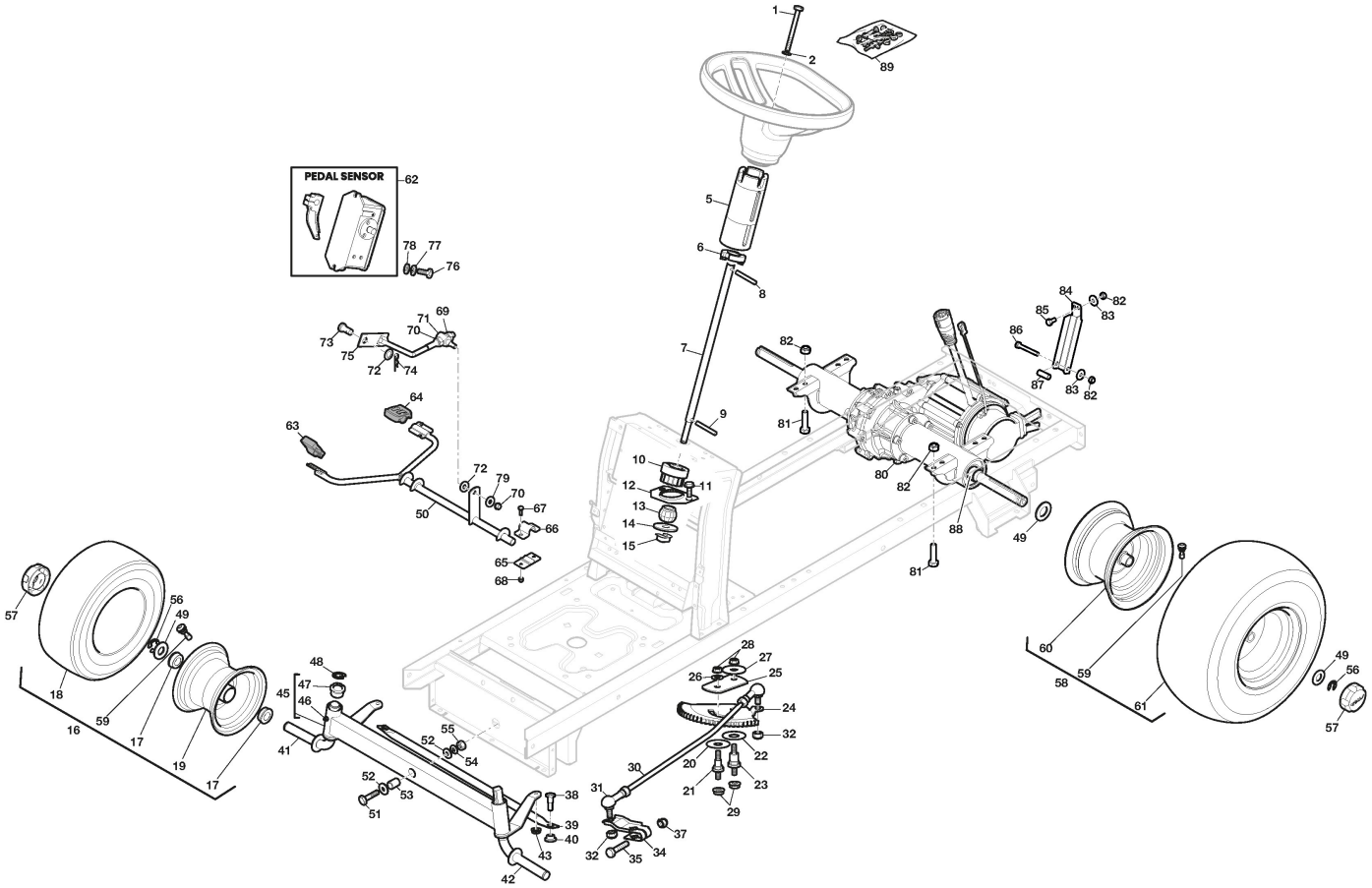

Copyright ST. S.P.A.

Steering

Ref.nr.	Qty	Item number	Description	Notes	From	Up to
1	1	112692100/0	Screw	M8x105		
2	1	112540260/0	Washer			
5	1	382785304/0	Support			
6	1	325038008/0	Bushing			
7	1	125520018/0	Steering Column			
8	1	112620300/0	Spring Pin 6x50			
9	1	112622650/0	Dowel pin			
10	1	125570003/0	Pinion			
11	2	127943054/0	Screw			
12	1	325785213/1	Support			
13	1	325743000/0	Joint			
14	1	112521370/0	Washer			
15	1	112436030/0	Plate			
16	2	382680124/0	Wheel Assy 15" - PR2 P512	15"		
17	4	125122200/2	Bearing			
18	2	125590044/0	Tyre 15x6.00-6 PR2 TL P512 OBOR	15"		
19	2	182001507/0	Front Wheel Rim			
20	1	322672151/0	Antifriction Washer			
21	1	125510173/0	Pin			
22	1	125670023/0	Washer			
23	1	125510165/0	Pin			
24	1	325735519/0	Steering Sector			
25	1	325547233/0	Plate			
26	1	112369500/0	Elastic Washer			
27	1	122160400/0	Elastic Disc			
28	2	112155010/0	Nut			
29	2	112155010/0	Nut			
30	1	125033153/0	Steering Wheels Rod			
31	2	122746609/0	Joint			
32	2	112156602/0	Self-locking nut - M10			
34	1	382318323/0	Steering Control Lever			
35	1	112692395/2	Screw - HEX M10x60			
37	1	112155020/0	Nut			
38	2	125510103/0	Pin			
39	1	325840029/0	Tie Rod			
40	2	325038007/0	Bushing			
41	1	382230373/1	Right Stub Axle	15"		
42	1	382230375/1	Left Stub Axle	15"		
43	2	112155000/0	Self-locking nut - M8			
45	1	382034029/0	Rod			
46	1	112379511/0	Grease Dispenser			
47	4	125034002/1	Bushing			
48	1	112001000/0	Circlip ø15			
49	6	125670005/2	Washer			
50	1	382000737/0	Drive/Reverse Pedal Assy			
51	1	112692695/0	Screw			
52	2	112523100/0	Washer			
53	1	125160016/1	Spacer			

Copyright ST. S.P.A.

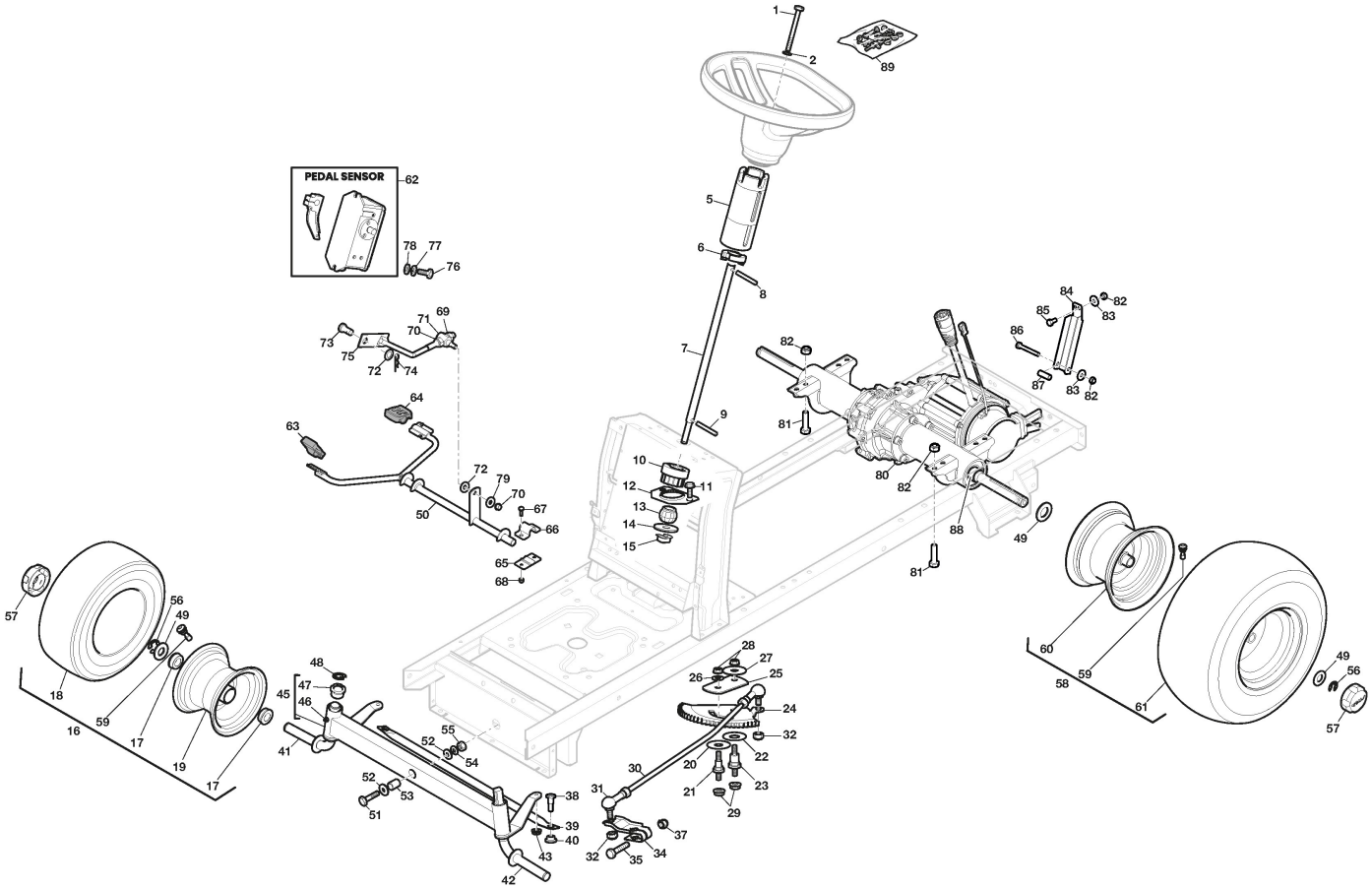

Copyright ST. S.P.A.

Ref.nr.	Qty	Item number	Description	Notes	From	Up to
54	1	112587100/0	Grower			
55	1	112295300/0	Nut			
56	4	112001000/0	Circlip ø15			
57	4	322110240/1	Stiga Hub Cap Black	Black		
58	2	382680125/0	Wheel Assy 18" - PR2 P512			
59	4	125950000/0	Valve			
60	2	182001509/1	Rear Wheel Rim			
61	2	125590045/0	Tyre 18x8.50-8 PR4 TL P512 OBOR			
62	1	118361037/1	Pedal sensor			
63	1	325110274/0	Clamp Cover Front			
64	1	325110331/0	Clamp Cover Rear			
65	2	325785350/0	Support			
66	2	325547231/1	Lifting Deck Axle Plate			
67	4	112735599/0	Screw			
68	4	112154510/0	Self-locking nut - M6			
69	1	112293200/0	Nut			
70	2	112155000/0	Self-locking nut - M8			
71	1	125510054/1	Pin			
72	2	325670008/1	Washer			
73	1	125510022/1	Pin			
74	1	124487997/0	Cotter Pin			
75	1	382000717/0	Drive/Reverse Rod Assy			
76	2	112793102/0	Screw - HEX M8x20			
77	2	112583500/0	Grower - M8			
78	2	112521360/0	Washer			
79	2	112523060/0	Washer			
80	1	118401028/0	Electric Transaxle			S/N 25KA3RON 012555
80	1	118401028/1	Electric Transaxle		S/N	
81	2	112793102/0	Screw - HEX M8x20			
82	8	112155000/0	Self-locking nut - M8			
83	2	112523060/0	Washer			
84	1	325785349/1	Support			
85	1	112792611/0	Screw			
86	1	112691800/0	Screw			
87	1	127047023/0	Transmission Bushing			
88	1	125040666/0	Bush Transaxle			
89	1	382180211/0	Steering Wheel Fixing Endow.			

Copyright ST. S.P.A.

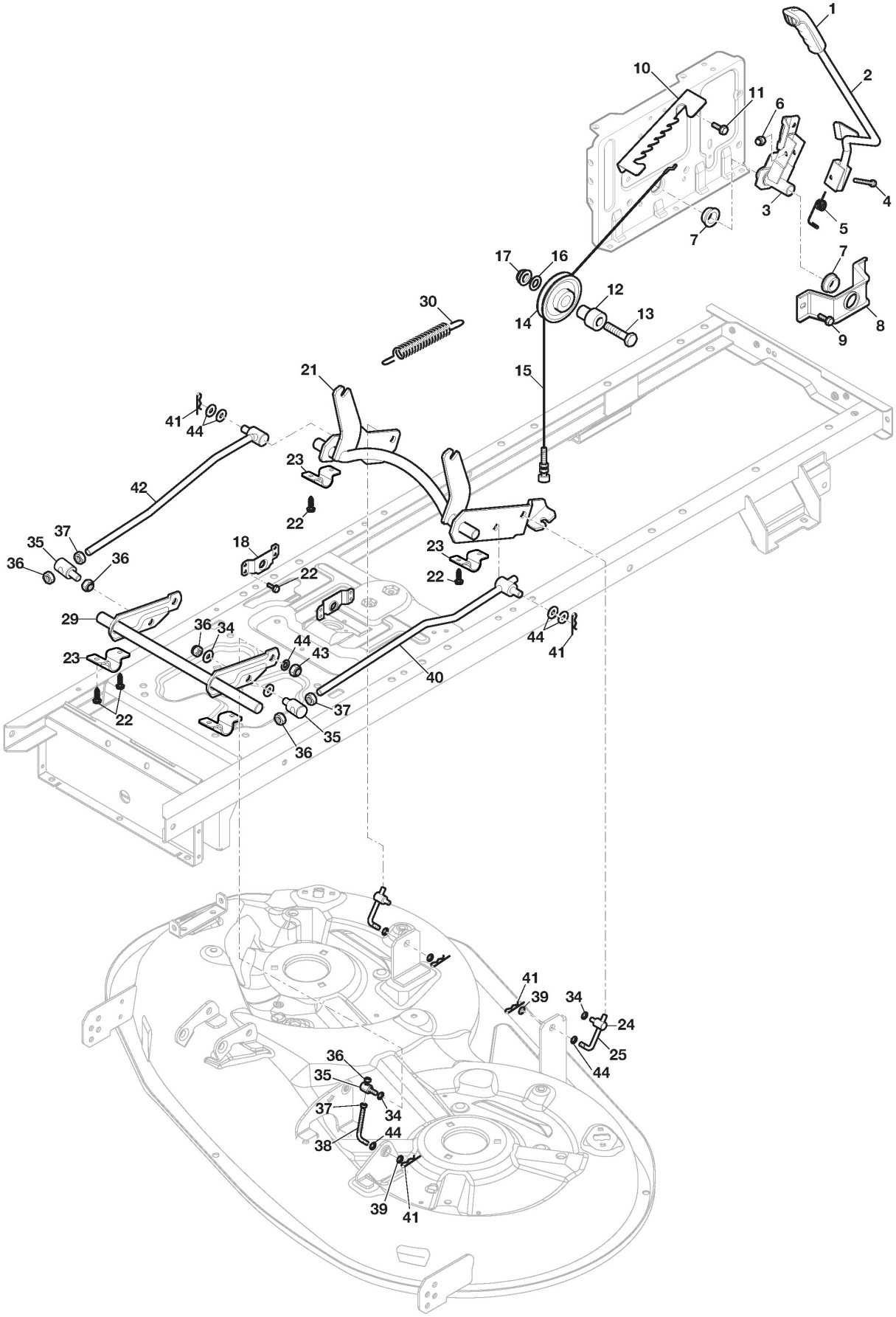

Copyright ST. S.P.A.

Cutting Plate Lifting

Ref.nr.	Qty	Item number	Description	Notes	From	Up to
1	1	325394533/0	Knob			
2	1	382318255/0	Lever			
3	1	382318231/1	Lifting Axle Assy			
4	1	112674700/0	Screw			
5	1	125430261/0	Spring			
6	1	112154510/0	Self-locking nut - M6			
7	2	325038006/0	Bushing			
8	1	325785297/0	Support			
9	2	125943009/0	Screw			
10	1	325735515/0	Steering Sector			
11	2	125943009/0	Screw			
12	1	112793701/0	Screw - HEX M8x30			
13	1	125040636/1	Bushing			
14	1	125601579/0	Pulley			
15	1	382004629/1	Deck Lifting Wire			
16	1	112523060/0	Washer			
17	1	112293201/0	Nut			
18	1	325774757/0	Fulcrum Clamp			
21	1	382000705/0	Rear Lifting Deck Axle Assy			
22	8	112735599/0	Screw			
23	4	325547231/1	Lifting Deck Axle Plate			
24	2	125510007/2	Pin			
25	2	125840041/0	Pin			
29	1	382000697/0	Front Lifting Deck Axle Assy			
30	2	125430218/1	Spring			
34	4	325670008/1	Washer			
35	4	125510007/2	Pin			
36	8	112156602/0	Self-locking nut - M10			
37	10	112295200/0	Nut - M10			
38	2	125840012/1	Tie Rod			
39	3	325670008/1	Washer			
40	1	382000699/0	Lift Deck Rod Assy, Left Link			
41	6	124487997/0	Cotter Pin			
42	1	382000701/0	Lift Deck Rod Assy, Right Link			
43	3	112156602/0	Self-locking nut - M10			
44	8	325670008/1	Washer			

Copyright ST. S.P.A.

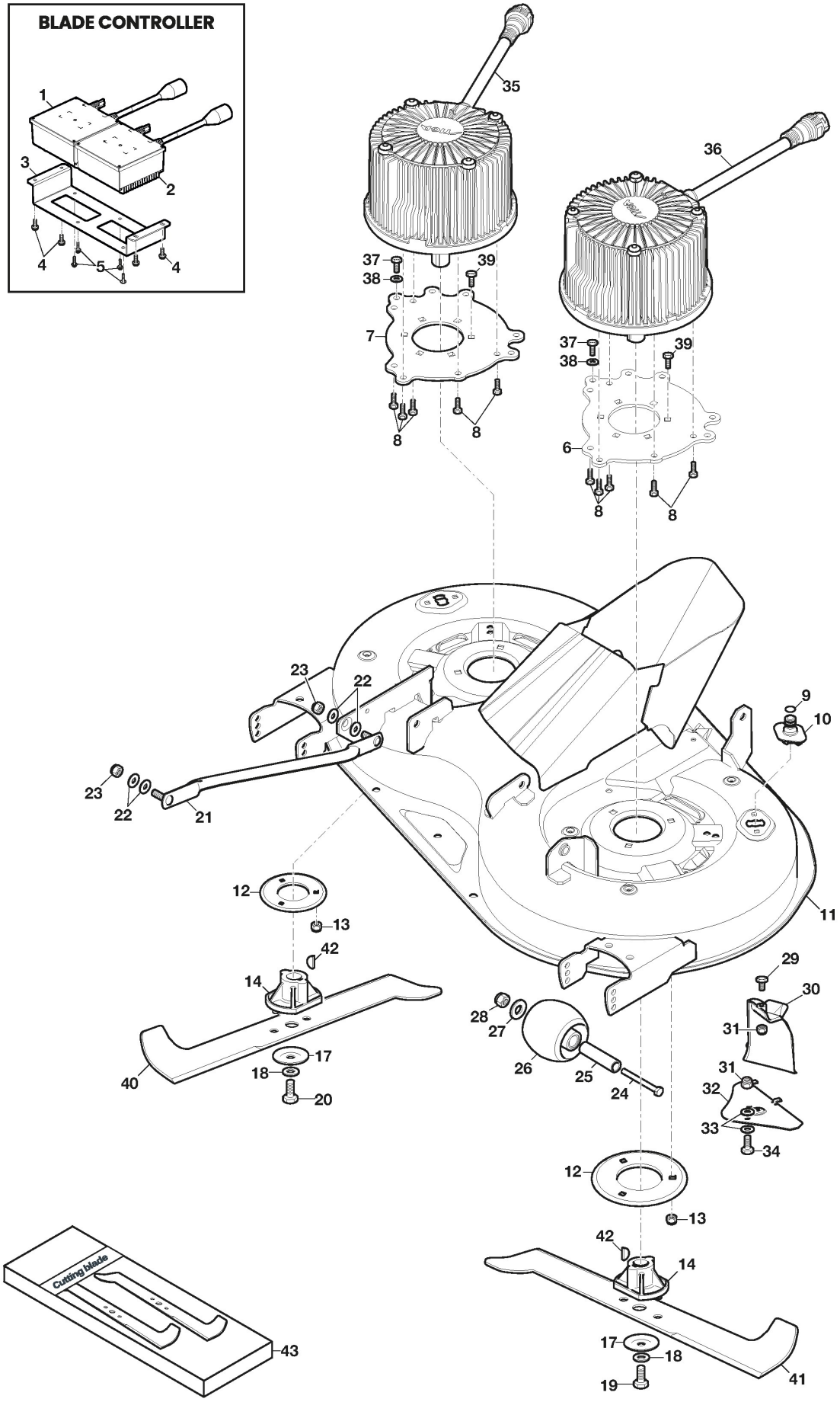

Copyright ST. S.P.A.

Cutting Plate

Ref.nr.	Qty	Item number	Description	Notes	From	Up to
1	1	118361082/1	Right Blade Motor Controller	FW3.6		
1	1	118361082/2	Right Blade Motor Controller	FW3.7		
2	1	118361083/1	Left Blade Motor Controller	FW3.6		
2	1	118361083/2	Left Blade Motor Controller	FW3.7		
3	1	325774821/0	Blade Controller Support Bracket			
4	4	112735599/0	Screw			
5	4	9893-0616-16	Screw - Torx trilobular M6x16			
6	1	325207219/0	Flange Assy			
7	1	382207229/0	Right Deck Flange Assy			
8	8	112760605/0	Screw			
9	2	119035000/0	Or Ring			
10	2	325033086/0	Water Hose Connection			
11	1	382564237/0	Cutting Plate Assy			
12	2	325160505/0	Disc			
13	6	112154210/0	Nut			
14	2	1134-9159-01	Blade Holder	STIGA pack with 125463200/0		
14	2	125463200/0	Blade Holder			
17	2	122160400/0	Elastic Disc			
18	2	112523080/0	Washer			
19	1	112735694/0	Screw			
20	1	112735695/1	Screw			
21	2	382000565/1	Cutting Deck Equalizer Rod Assy			
22	8	325670008/1	Washer			
23	4	112156602/0	Self-locking nut - M10			
24	2	112692100/0	Screw			
25	2	125160072/0	Spacer			
26	2	182700006/0	Anti Scalp Wheel Ø95			
27	2	112521350/0	Washer			
28	2	112293201/0	Nut			
29	3	112791213/1	Screw			
30	1	325140111/0	Deflector			
31	4	112154510/0	Self-locking nut - M6			
32	1	325785509/0	Rear Deflector Suppot			
33	4	112523040/0	Washer - M6			
34	1	112815206/0	Screw			
35	1	118563763/1	Right Blade Electric Motor			
36	1	118563764/1	Left Blade Electric Motor			
37	4	112793102/0	Screw - HEX M8x20			
38	4	112583500/0	Grower - M8			
39	6	112818700/0	Screw			
40	1	182004362/0	Right Blade, Winged			
41	1	182004363/0	Left Blade, Winged			
42	2	112139100/0	Key			
43	1	1134-9226-01	Winged Blades	STIGA pack with 182004362/0 + 182004363/0		

Copyright ST. S.P.A.

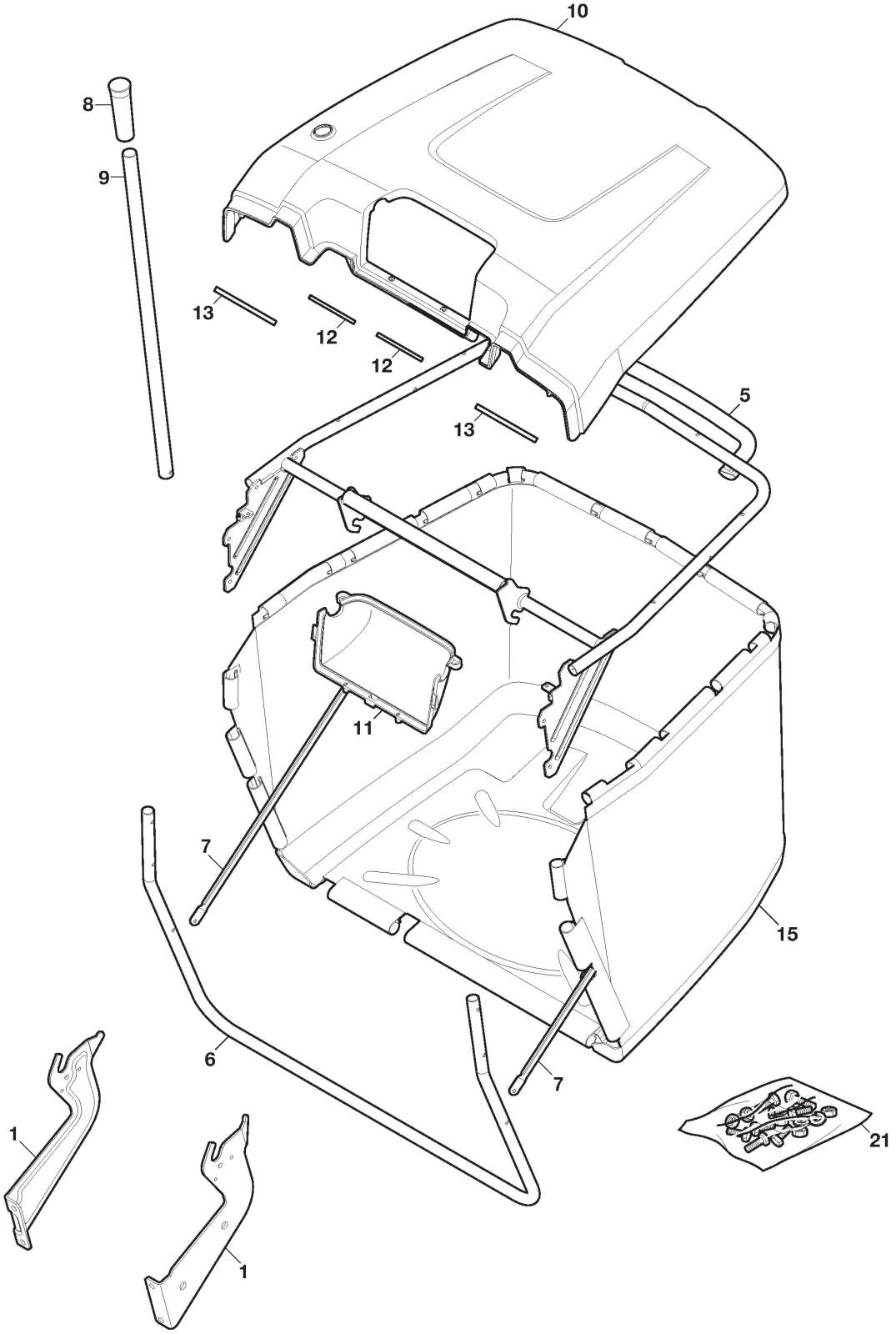

Copyright ST. S.P.A.

Grasscatcher

Ref.nr.	Qty	Item number	Description	Notes	From	Up to
1	1	382785289/1	Support Ass.Y			
5	1	382800139/2	Upper Frame			
6	1	382800141/0	Front Frame			
7	2	325650149/0	Stiffening			
8	1	125394508/0	Knob			
9	1	325869087/1	Rod			
10	1	325110538/2	Yellow Grass-Catcher Cover			
11	1	325207195/1	Handle Cover			
12	2	125270802/0	Seal			
13	2	125270803/0	Seal			
15	1	182105947/0	Grasscatcher	Black w/o Logo		
21	1	382180147/0	Outfit, Screws			

Copyright ST. S.P.A.

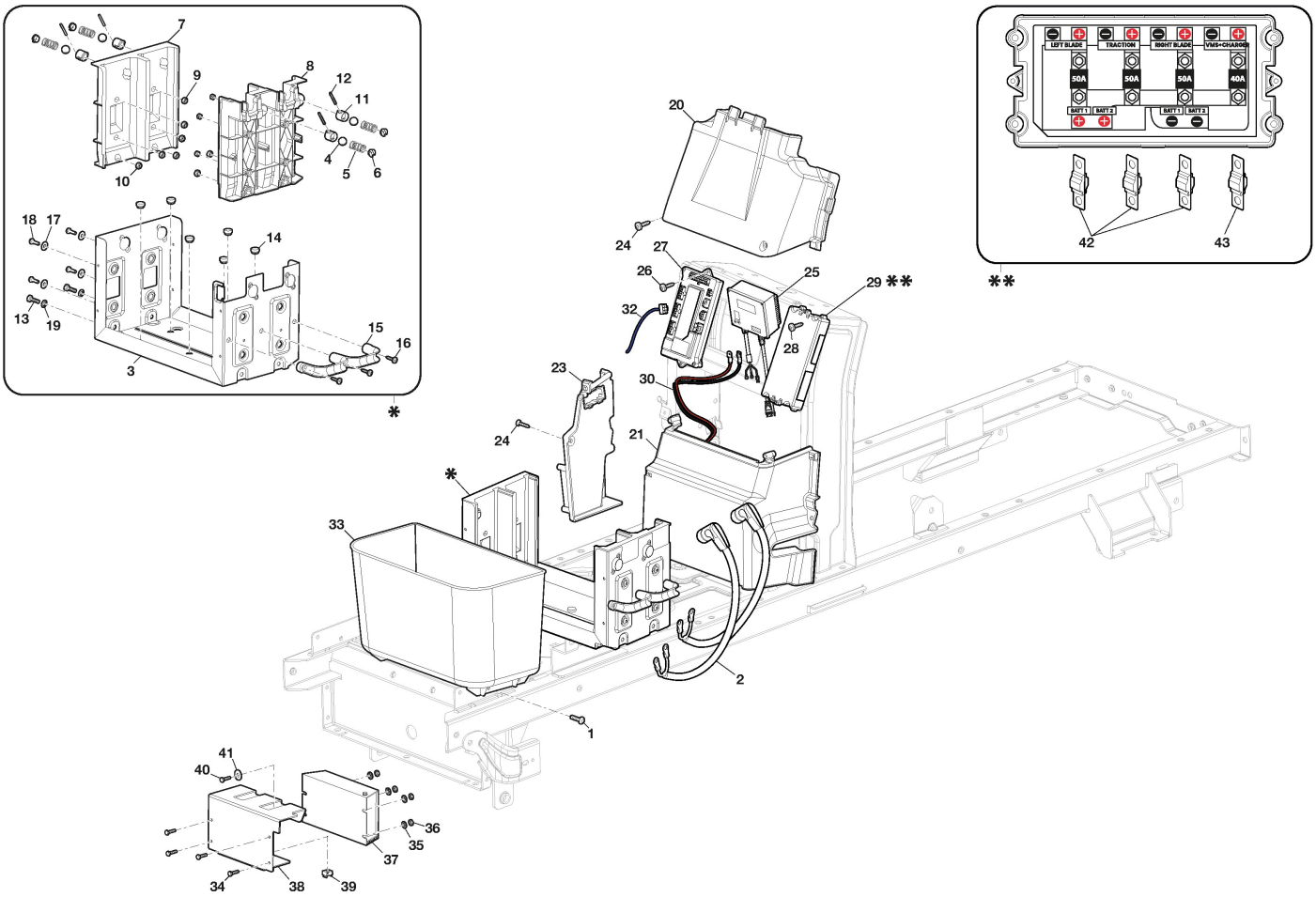

Copyright ST. S.P.A.

Battery Group

Ref.nr.	Qty	Item number	Description	Notes	From	Up to
1	4	112728696/0	Screw - Torx PT K40x12			
2	1	182040253/0	Battery Power Cable (56V)			
3	1	325110575/0	Frame Batteries Box			
4	4	325785630/0	Sphera Base Support (Rack)			
5	4	125430300/0	Battery Locking Spring (Rack)			
6	4	119216071/0	Radial Bearing 1/2" (Rack)			
7	1	325785631/0	Right Battery Guide			
8	1	325785632/0	Left Battery Guide			
9	14	112154510/0	Self-locking nut - M6			
10	10	112155000/0	Self-locking nut - M8			
11	4	327790015/0	Battery Block Cap (Rack)			
12	4	122753001/0	Pin			
13	4	112793102/0	Screw - HEX M8x20			
14	6	325120312/0	Bumper For Battery Rack			
15	1	325192102/0	Black Wire Guide			
16	3	112728300/0	Screw			
17	8	112523040/0	Washer - M6			
18	8	112727806/0	Screw			
19	4	112521350/0	Washer			
20	1	325600139/1	Upper Guard			
21	1	325600162/0	Cover Electronics Parts			
23	1	325600142/0	Left Protection			
24	3	112728697/0	Screw - Torx PT K50x16			
25	1	118361084/3	Traction Controller			
26	4	112789021/0	Screw			
27	1	382722482/0	VMS Without Actuator Assy			
28	4	112728696/0	Screw - Torx PT K40x12			
29	1	382722485/0	Fuse Box Assembly			
30	1	182040254/0	VMS Power Cable (56V)			
32	1	118361094/0	Program Configuration Key	Only Side Discharge Models		
33	1	325110578/0	Internal Frontal Box			
34	4	112789021/0	Screw			
35	4	112540230/0	Washer			
36	4	112154330/0	Nut			
37	1	118361085/0	External Resistance			
38	1	325774857/0	Resistor Bracket			
39	1	112360425/0	Square Nut			
40	3	112792611/0	Screw			
41	3	112540260/0	Washer			
42	3	133340047/0	Fuse (60V 50A)			
43	1	133340046/0	Fuse (60V 40A)			

Copyright ST. S.P.A.

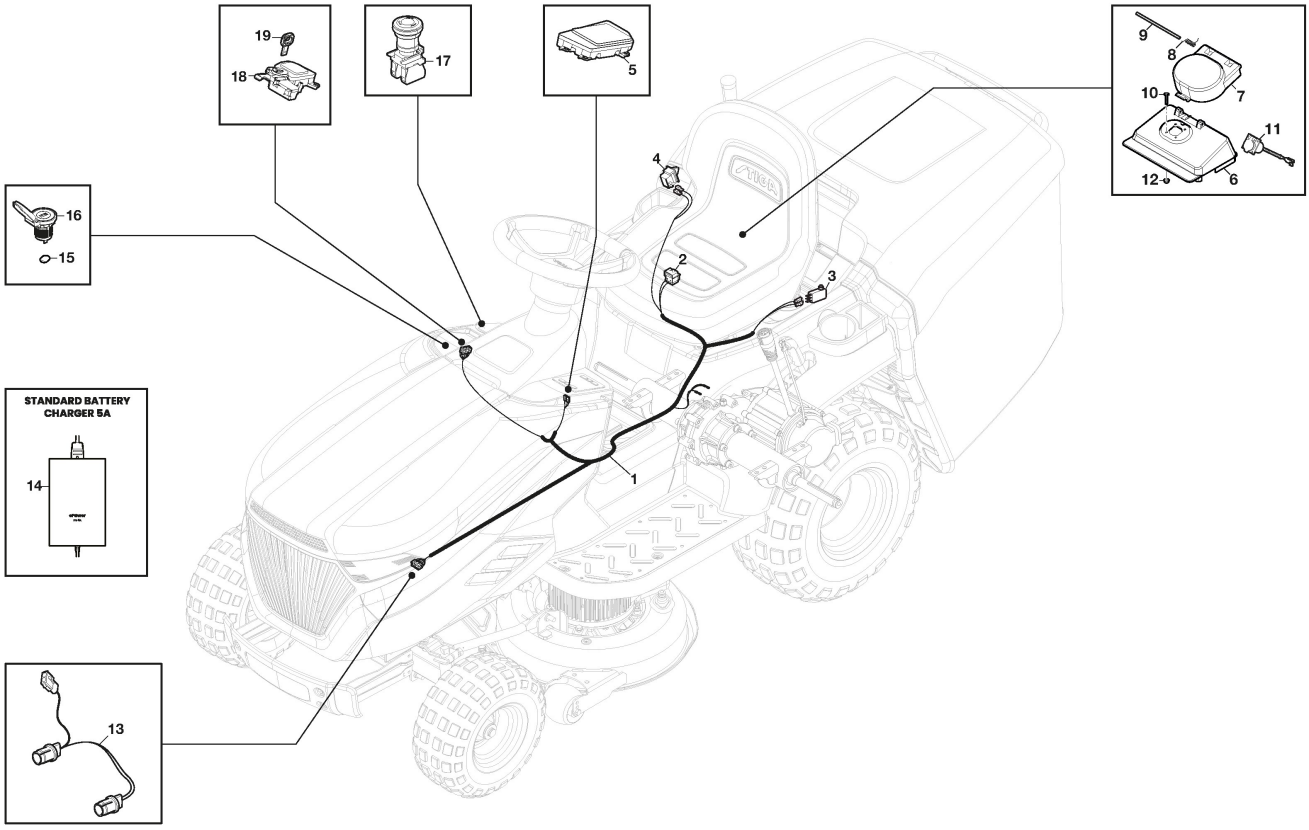

Copyright ST. S.P.A.

Electrical Parts

Ref.nr.	Qty	Item number	Description	Notes	From	Up to
1	1	182040255/0	Main Harness			
2	1	119410633/0	Seat Microswitch			
3	1	119410640/0	Microswitch			
4	1	119410622/1	Battery Bonnet Microswitch			
5	1	382722470/1	Electronic Card Assy			
6	1	325785635/0	Charger Plug Support			
7	1	325110582/0	Charger Plug Cover, Black			
8	1	125430296/1	Spring			
9	1	125510183/0	Fulcrum Pin			
10	4	112726388/0	Screw - Pan head - M4x12			
11	1	182040256/0	Jumper Charger Cable			
12	4	112290800/0	Nut			
13	1	118361095/0	Bonnet Headlights Cable			
14	1	182050002/0	Battery Charger Assembly 5A	5A		S/N
14	1	182050002/1	Battery Charger Assembly 5A	5A	S/N 26DA3RON 002774	
15	1	325774774/1	USB Anti-rotating plate			
16	1	118450201/2	USB Charger Inlet			
17	1	187040332/0	Harness			
18	1	382410519/0	Starting Key Panel Assy			
19	2	118210032/0	Key set			

Copyright ST. S.P.A.

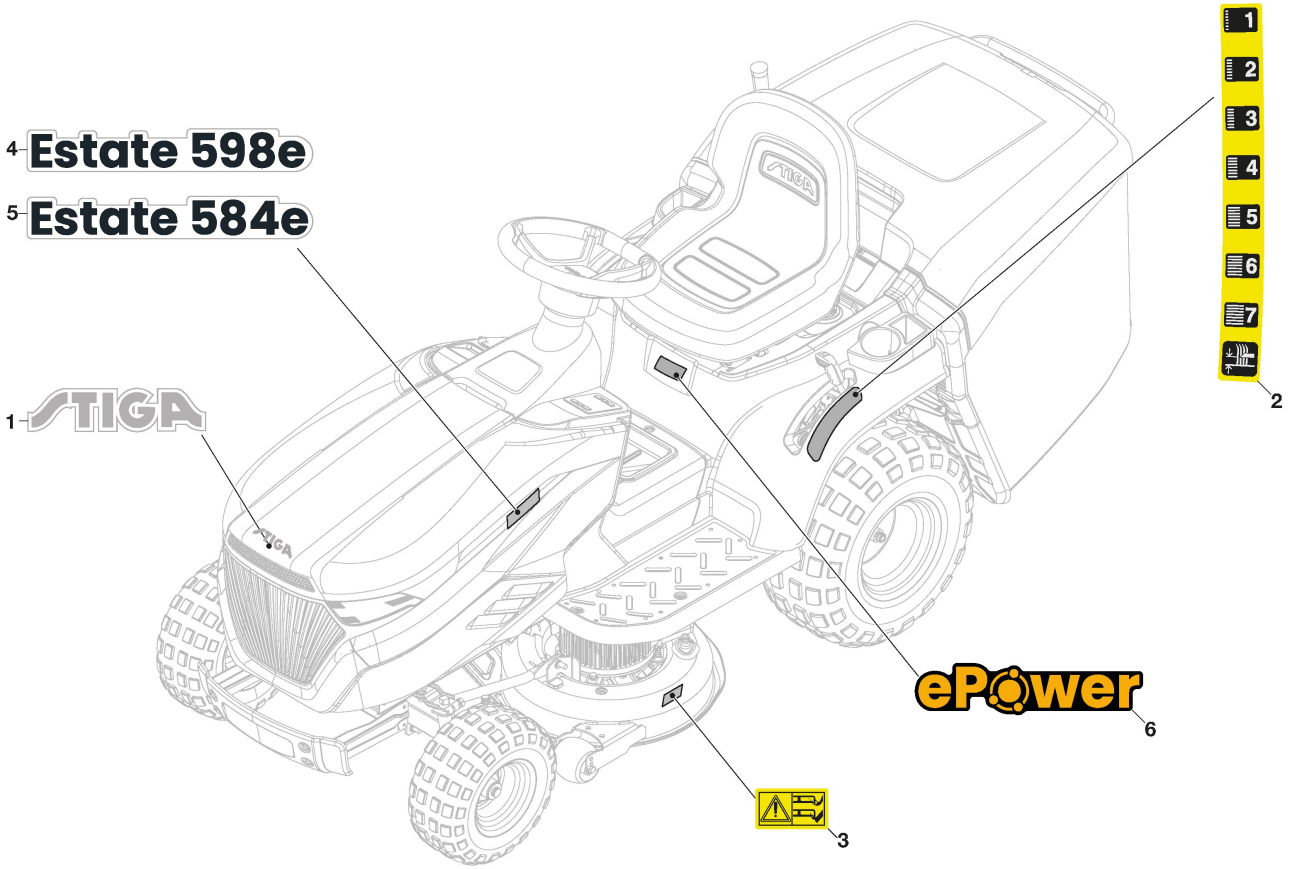

Copyright ST. S.P.A.

Labels

Ref.nr.	Qty	Item number	Description	Notes	From	Up to
1	1	114374432/0	STIGA logo Label			
2	1	114366142/0	Lifting Deck Decal			
3	2	114373673/0	Cutting Deck Danger Label			
4	1	114373396/0	Denomination Label "Estate 384e"	Estate 384e		
5	1	114374448/0	Denomination Label "Estate 598e"	Estate 598e		
6	1	114373788/0	Label - E-Power			

Copyright ST. S.P.A.

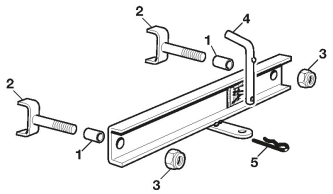

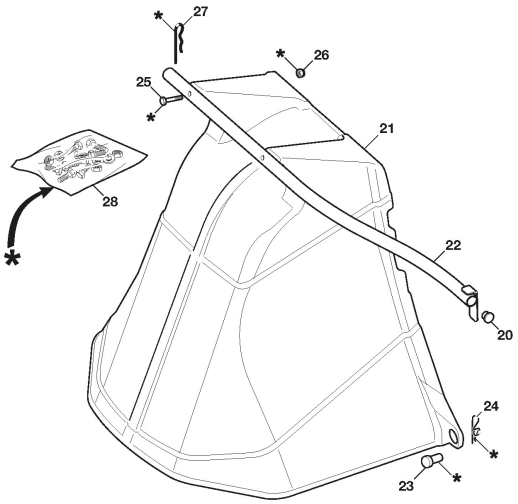

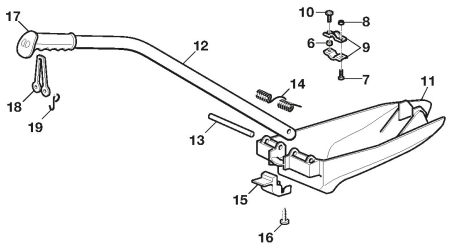

Copyright ST. S.P.A.

Optionals On Request

Ref.nr.	Qty	Item number	Description	Notes	From	Up to
1	2	125160108/0	Spacer			
2	2	382650211/0	Stiffening			
3	2	112155000/0	Self-locking nut - M8			
4	1	125510021/1	Hitch Pin			
5	1	124487999/0	Spring Pin			
6	1	122170600/0	Spacer			
7	1	112792425/0	Screw			
8	3	112292102/0	Nut			
9	2	327546015/2	Plate			
10	1	112791400/0	Screw - HEX M6x20			
11	1	325140112/0	Deflector			
12	1	325394021/0	Handle			
13	1	125510077/0	Pin			
14	1	125430245/0	Spring			
15	1	325547414/0	Plate			
16	1	112735402/0	Screw			
17	1	325280000/1	Handgrip			
18	1	125840011/1	Tie Rod			
19	2	125253004/0	Mulch.Kit Fixing Hook			
20	2	118566112/0	Polyethylene Push Road D=20inch			
21	1	325600093/1	Ejection Guard			
22	1	382869044/0	Support			
23	2	125510022/1	Pin			
24	2	124487998/0	Cotter Pin			
25	2	112689515/0	Screw			
26	2	112154510/0	Self-locking nut - M6			
27	1	124487999/0	Spring Pin			
28	1	382180028/0	Outfit, Screws			

Copyright ST. S.P.A.

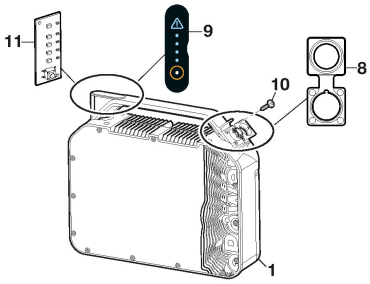

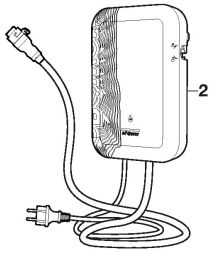

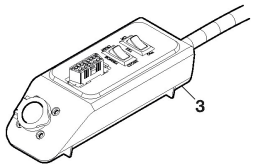

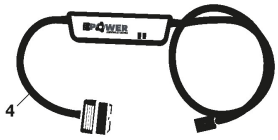

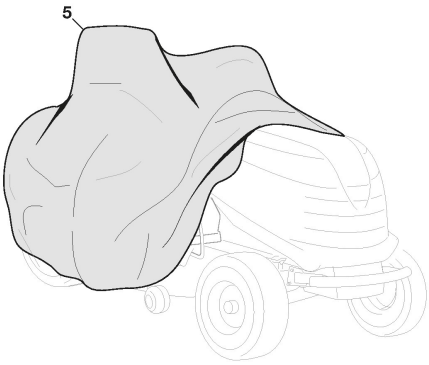

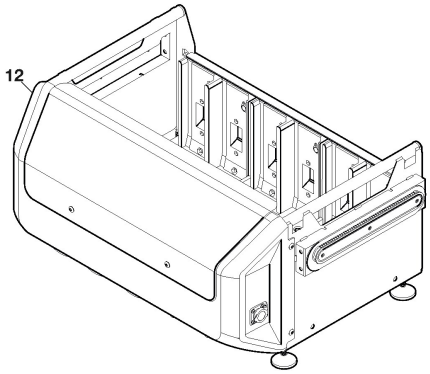

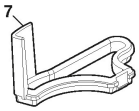

Copyright ST. S.P.A.

Accessories

Ref.nr.	Qty	Item number	Description	Notes	From	Up to
1	1	279000004/ST1	40Ah ePower Pro Battery			
2	1	279010104/ST1	Pro Charger 18A	18A - Managed as Finish Product		
2	1	279010204/ST1	Pro Charger 30A	30A - Managed as Finish Product		
3	1	382033308/0	Battery Diagnostic Tool Adapter Assy			
4	1	1134-9635-01	Diagnostic Tool OBDII			
5	1	1134-9177-01	Protective Cover			
6	1	1500-9036-01	MultiClean Detergent			
7	1	325600143/0	Wire Sheath			
8	1	325110567/0	Cap Connector			
9	1	114374374/0	Led Membrane 48V Cassette Battery			
10	4	112760463/0	Screw			
11	1	122720275/0	PCBA Led Panel			
12	1	279020208/ST1	ePower PRO Station			

Copyright ST. S.P.A.

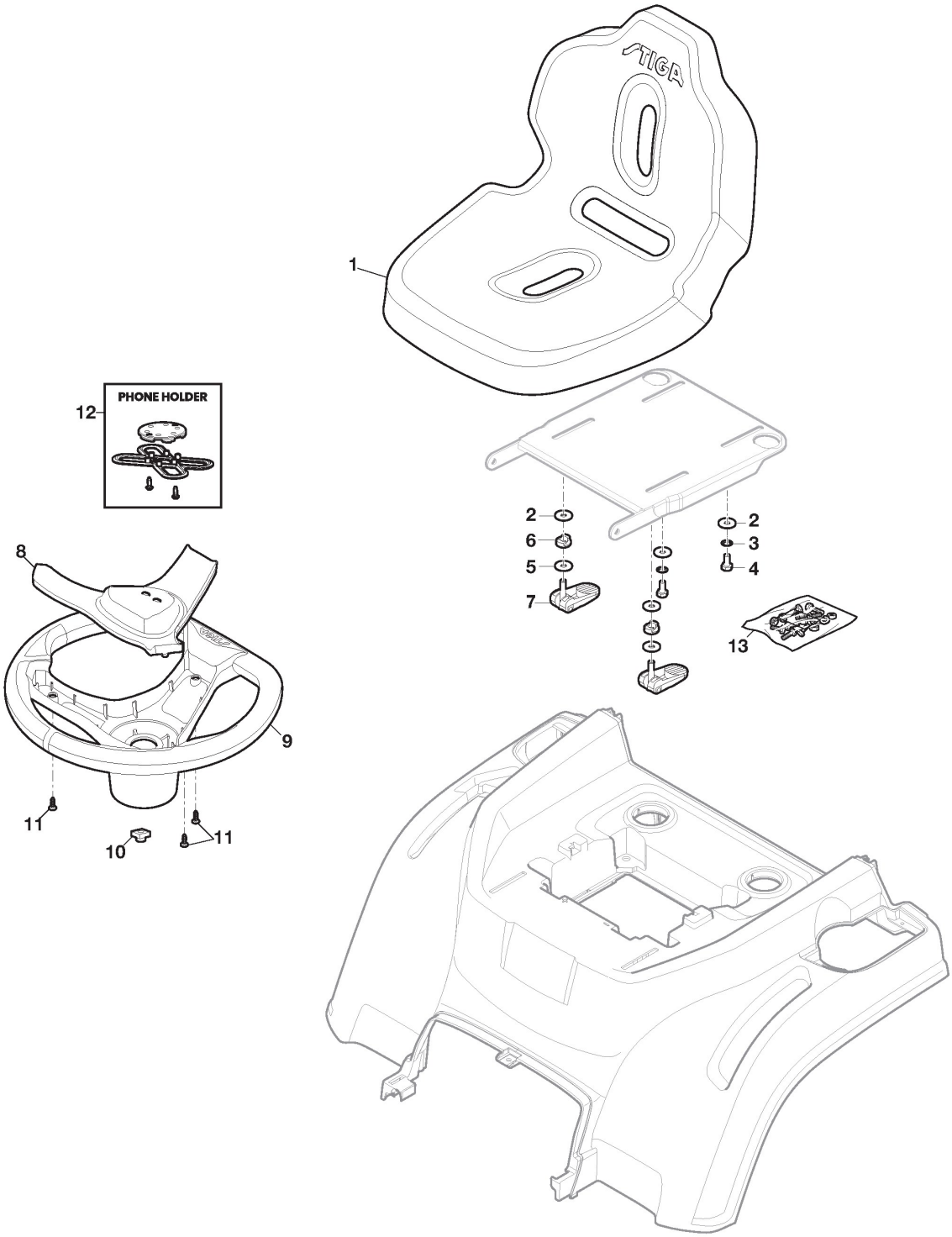

Copyright ST. S.P.A.

Seat & Steering Wheel

Ref.nr.	Qty	Item number	Description	Notes	From	Up to
1	1	125722600/0	Seat			
2	2	112523060/0	Washer			
3	2	112540260/0	Washer			
4	2	112792611/0	Screw			
5	2	125262001/0	Quick Lock Washer Rubber			
6	2	125040667/0	Quick Lock Seat Guide Bush			
7	2	382394513/0	Fast Lock Seat Knob Ass			
8	1	325580514/0	Steering Wheel Cap	Grey		
9	1	325961230/0	Steering Wheel			
10	1	125160138/0	Steering Spacer			
11	3	112728696/0	Screw - Torx PT K40x12			
12	1	384578001/0	Phone Holder			
13	1	382180206/0	Seat Fixing Endow. Assy w/Starting Key			

Copyright ST. S.P.A.