ALPINA

ACS 180 E (14") (2024)

292614004/A21

Spare parts list
Reservdelar
Repuestos
Ersatzteile
Pièces détachées
Reserve onderdelen
Catalogo ricambi

● Use ST. S.p.A. Genuine Spare Parts specified in the parts list for repair and/or replacement.
● The contents described in the parts list may change due to improvement.
● The drawings of the spare parts are only indicative And might Not represent the part in question exactly.
● The indications "right" - "left" - "front" - "rear" refer to the position of the operator when using the machine.
● When placing orders of parts for repair And/Or replacement, make sure that the illustrated parts list Is the one applying to the machine's year of manufacture, as shown on the identification plate attached to the machine.

All rights reserved. No part Of this material may be reproduced Or transmitted, in any form Or by any means, electronic Or mechanical, including photocopying, recording Or by any information storage And retrieval system, without permision in writing from ST. S.p.A.

Copyright ST. S.P.A.

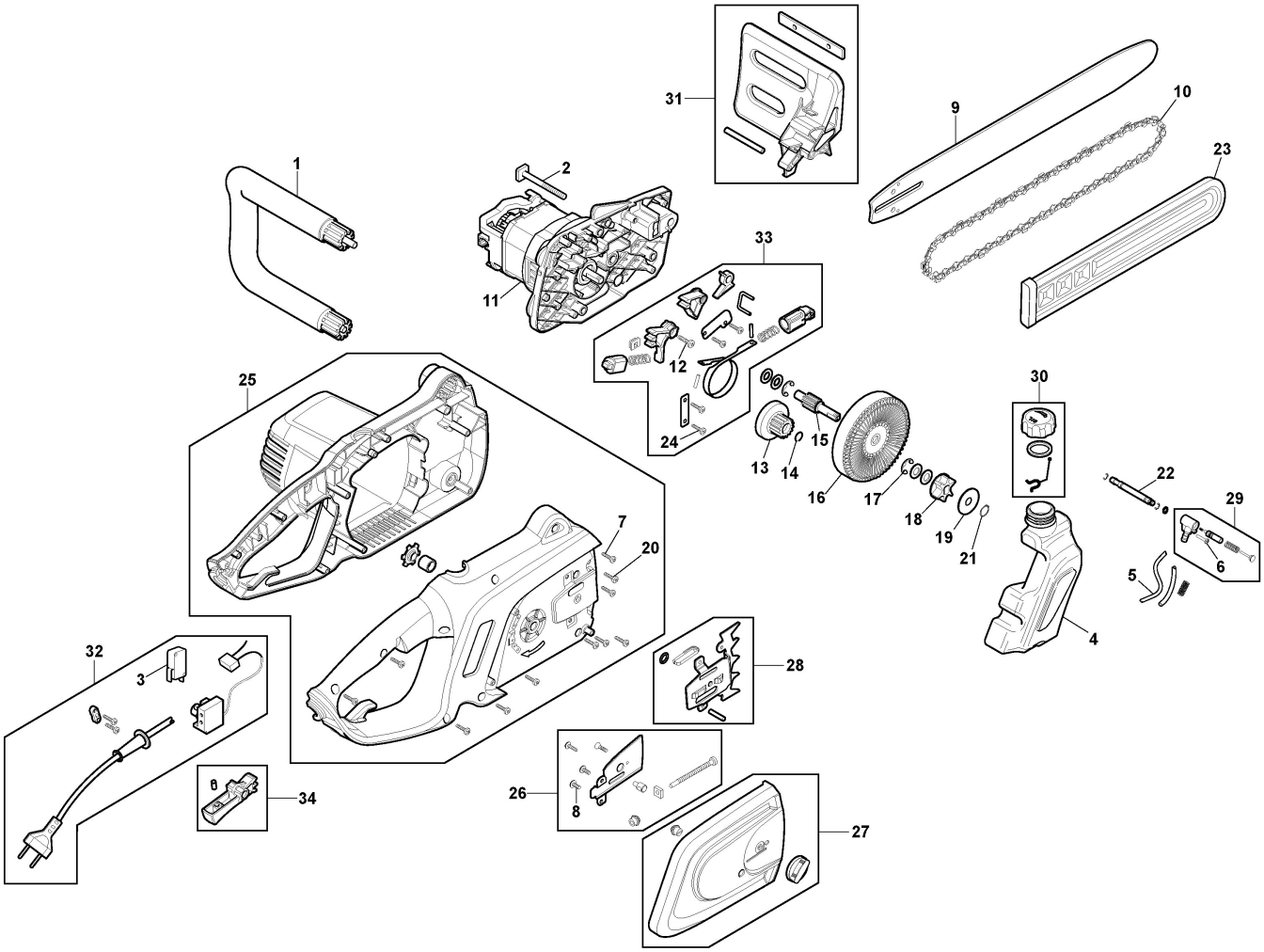

Copyright ST. S.P.A.

Electric Chainsaw

Ref.nr.	Qty	Item number	Description	Notes	From	Up to
1	1	118805325/0	Front Handle			
2	1	118805326/0	Bolt			
3	1	118801612/0	Power switch			
4	1	118805327/0	Oil Tank			
5	2	118805336/0	Oil Tube			
6	1	112727356/0	Screw			
7	1	112728531/0	Screw			
8	2	112727815/0	Screw			
9	1	118800127/0	Guide Bar 14"-3/8"-0,050"			
10	1	1519-9116-02	Chain 14"-3/8"-0,050"-52E			
11	1	118805328/0	1800W Electric Motor			
12	1	123878009/0	Screw			
13	1	118805329/0	Clutch Drum			
14	1	112608500/0	Seeger			
15	1	118805330/0	Axle			
16	1	118805331/0	Gear			
17	2	112000956/0	Circlip ø9			
18	1	118805332/0	Pinion			
19	1	118805333/0	Spacer			
20	18	112728099/1	Screw			
21	1	112608500/0	Seeger			
22	1	118805334/0	Oil Tube			
23	1	4181297	Chain Cover 14inch			
24	4	112728099/1	Screw			
25	1	118805350/0	Housing Kit			
26	1	118805351/0	Chain Tensioner kit			
27	1	118805352/0	Clutch Cover Kit			
28	1	118805353/0	Spike Kit			
29	1	118805354/0	Oil Pump Assy			
30	1	118805355/0	Oil Cap Assy			
31	1	118805356/0	Hand Guard Kit			
32	1	118805357/0	Power Cord & Switches Assy			
33	1	118805358/0	Brake System Kit			
34	1	118805359/0	Trigger Kit			

Copyright ST. S.P.A.