Technical Data Sheet

CODE 17144

LINEO 100

Mixed flow extractor fans



Certifications

CE

CCC

G-Mark

UKCA

CB TEST CERTIFICATE

Technical and performance data

Frequency (Hz)	50/60
Insulation class	II°
IP	44
Max absorbed current at Max speed (A)	0,11
Max absorbed current at Min speed (A)	0,09
Max absorbed Power at 60 Hz (W)	22
Max absorbed power at Max speed (W)	23
Max ambient temperature for continuous operation (°C)	60
Nominal diameter (mm)	100
Power absorbed at 1st speed (W)	20
Voltage (V)	220-240
Weight (Kg)	2
Airflow at 1st speed (l/s)	50
Airflow at 1st speed (m³/h)	180
Breakout sound power LWA at Max speed [dB (A)]	50,0
Breakout sound power LWA at Min speed [dB (A)]	41,6
Breakout sound pressure at 3m at Max speed Lp [dB (A)]	29,5
Breakout sound pressure at 3m at Min speed Lp [dB (A)]	21,2
Max airflow at Max speed (l/s)	70,8
Max airflow at Max speed (m³/h)	255
Max pressure at Max speed (mmH20)	16,5
Max pressure at Max speed (Pa)	161,9
Max RPM	2030
Min RPM	1520
Potenza sonora at supply side at Min speed LWA [dB (A)]	45,6
Pressure at 1st speed (mmH20)	13
Pressure at 1st speed (Pa)	127,5
Sound power at extract side at Max speed LWA [dB (A)]	56,6
Sound power at extract side at Min speed LWA [dB (A)]	49,5
Sound power at supply side at Max speed LWA [dB (A)]	53,6
Sound pressure at extract side at 3m at Max speed Lp [dB (A)]	39,0
Sound pressure at extract side at 3m at Min speed Lp [dB (A)]	31,9
Sound pressure at suply side at 3m at Max speed Lp [dB (A)]	36,1
Sound pressure at suply side at 3m at Min speed Lp [dB (A)]	28,0

Dimensions

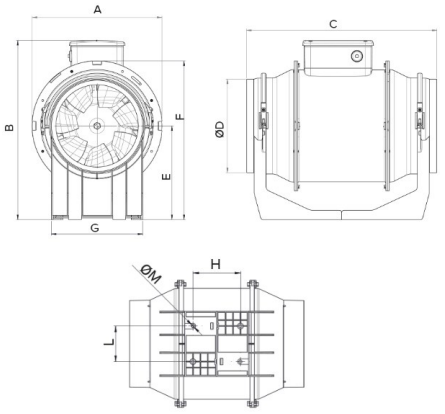

Size A (mm)	188,5
Size B (mm)	211
Size C (mm)	303
Size D (mm)	96
Size E (mm)	101,5
Size F (mm)	189
Size G (mm)	90
Size H (mm)	80
Size L (mm)	60
Size M (mm)	5,5

PER INFORMAZIONI / FOR INFORMATION

ITALY
Pre Sales:
prevendita@vortice-italy.com
After Sales:
postvendita@vortice-italy.com

UNITED KINGDOM & REP. OF IRELAND
Sales Dept:
sales@vortice.ltd.uk
Technical Dept:
technical@vortice.ltd.uk

OTHER COUNTRIES
Sales Dept:
export@vortice-italy.com
After Sales:
after-sales@vortice-italy.com

Technical Data Sheet

CODE 17144

LINEO 100

Mixed flow extractor fans

Description

• Enclosures made of fire resistant plastic resin, E2 class, according with ISO EN 11925-2: 2010, in areas close to motor and electrical components.
• Nominal diameter 100 mm.
• Induction motor, thermally protected, with shaft mounted on ball bearing supports, coupled with a centrifugal impeller.
• High water resistance: IPX5 (if installed in a duct).
• Speed adjustable through Vortice speed devices.

Curves

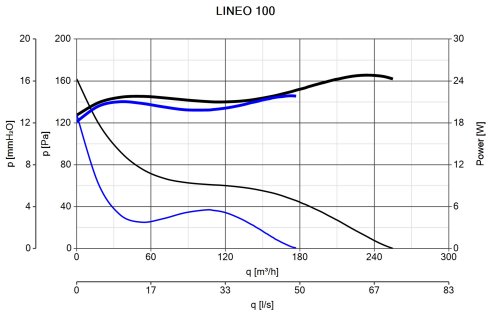

Accessories



C PIR
Code 12998



C TEMP
Code 12992



C SMOKE
Code 12993



C HCS
Code 12994

C TIMER

C TIMER
Code 12999



DUO
Code 22914

LINEO-G 100
Code 22701

LINEO-PF 100
Code 22577



IN-LINE-S 100
Code 22551

LINEO-C 100
Code 22584



C 1.5 (COMANDO EL.

1.5 A)
Code 12966



KIT SCB (TRASF.E.C.)

Code 22481

PER INFORMAZIONI / FOR INFORMATION

ITALY
Pre Sales:
prevendita@vortice-italy.com
After Sales:
postvendita@vortice-italy.com

UNITED KINGDOM & REP. OF IRELAND
Sales Dept:
sales@vortice.ltd.uk
Technical Dept:
technical@vortice.ltd.uk

OTHER COUNTRIES
Sales Dept:
export@vortice-italy.com
After Sales:
after-sales@vortice-italy.com