Technical Data Sheet

CODE 40356

E 254 T

Low-pressure plate axial fans



Certifications

CE

EAC

Technical and performance data

Absorbed current at 220 V (A)	0,35
Absorbed current at 240 V (A)	0,40
Absorbed current at 380 V (A)	0,20
Absorbed current at 415 V (A)	0,23
Absorbed power at 220-380 V (W)	55
Absorbed power at 240-415 V (W)	70
Frequency (Hz)	50
Insulation class	I°
Max absorbed current (A)	0,40
Max absorbed power (W)	70
Max ambient temperature for continuous operation (°C)	55

Motor protection IP	44
Nominal diameter (mm)	250
Number of poles	4
Voltage (V)	220/380 240/415
Weight (Kg)	3
Max airflow (l/s)	277,8
Max airflow (m³/h)	1000
Max pressure (mmH2O)	7,3
Max pressure (Pa)	71
RPM	1400
Sound pressure Lp [dB (A)] at 3 m	53

Dimensions

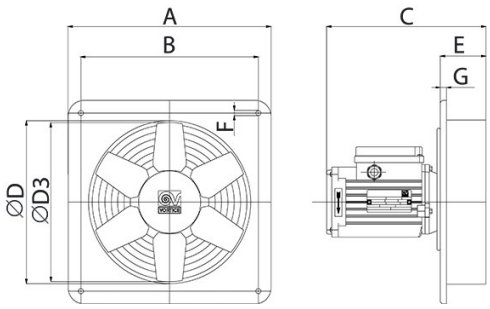

Ø (mm)	250
Size A (mm)	320
Size B (mm)	280
Size C (mm)	201
Size D (mm)	Ø 256
Size D3 (mm)	Ø 250
Size E (mm)	68
Size F (mm)	8
Size G (mm)	10

PER INFORMAZIONI / FOR INFORMATION

ITALY
Pre Sales:
prevendita@vortice-italy.com
After Sales:
postvendita@vortice-italy.com

UNITED KINGDOM & REP. OF IRELAND
Sales Dept:
sales@vortice.ltd.uk
Technical Dept:
technical@vortice.ltd.uk

OTHER COUNTRIES
Sales Dept:
export@vortice-italy.com
After Sales:
after-sales@vortice-italy.com

Technical Data Sheet

CODE 40356

E 254 T

Low-pressure plate axial fans

Description

• Nominal diameter 250 mm
• Wall-mounting panel manufactured from phosphated pressed steel, polyester powder coated with hammered effect finish, guaranteeing long-term resistance to atmospheric agents.
• Ventilation port fashioned in one piece with the panel and gauged to optimize air flow.
• Protective grille (in accordance with UNI ISO 13857 standard) combining the function of motor bracket, made of electrically welded steel with epoxy paint finish, colour black. Easy removal simplifies maintenance and cleaning of the fan.
• 1 speed asynchronous three-phase AC motor with shaft turning in double shielded ball bearings, insulation class F.
• Maximum air flow: 1,000 m3/h.
• Impeller with 6 wing profile blades keyed to a diecast aluminium hub and dynamically balanced (UNI ISO 1940 – Balancing class 6.3), optimized to deliver maximum performance and low noise levels, moulded from filled polypropylene for superior dimensional stability and resistance to atmospheric agents.
• Vortice speed controller.

Curves

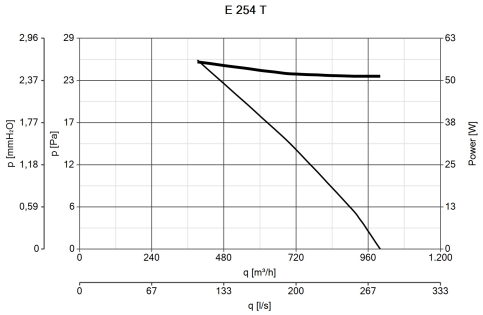

Accessories



IRT 15
Code 12923



PGR 250 (PERSIANA GRAVITA')
Code 50150

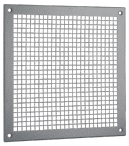

TRA 250 (TELAIO CON RETE ANTINF.)
Code 51150



DPU 250 (DISTANZIATORE)
Code 52151



IRET INVERTER 2,5 M
Code 12816

PER INFORMAZIONI / FOR INFORMATION

ITALY
Pre Sales:
prevendita@vortice-italy.com
After Sales:
postvendita@vortice-italy.com

UNITED KINGDOM & REP. OF IRELAND
Sales Dept:
sales@vortice.ltd.uk
Technical Dept:
technical@vortice.ltd.uk

OTHER COUNTRIES
Sales Dept:
export@vortice-italy.com
After Sales:
after-sales@vortice-italy.com