Technical Data Sheet

CODE 41459

E 604 M

Low-pressure plate axial fans



Certifications

EAC

Technical and performance data

Absorbed current at 220 V (A)	1,45
Absorbed current at 240 V (A)	1,45
Absorbed power at 220 V (W)	320
Absorbed power at 240 V (W)	345
Frequency (Hz)	50
Insulation class	I°
Max absorbed current (A)	1,45
Max absorbed power (W)	345
Max ambient temperature for continuous operation (°C)	65
Max temperature of exhaust air (continuous operation)	65

Motor protection IP	44
Nominal diameter (mm)	630
Number of poles	4
Voltage (V)	220-240
Weight (Kg)	10
Max airflow (l/s)	1944
Max airflow (m³/h)	7000
Max pressure (mmH2O)	8,2
Max pressure (Pa)	80
RPM	1400

Dimensions

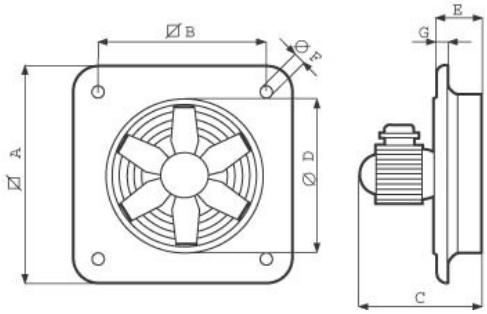

Size A (mm)	760
Size B (mm)	630
Size C (mm)	283
Size D (mm)	Ø 610
Size E (mm)	100
Size F (mm)	Ø 12
Size G (mm)	15

PER INFORMAZIONI / FOR INFORMATION

ITALY
Pre Sales:
prevendita@vortice-italy.com
After Sales:
postvendita@vortice-italy.com

UNITED KINGDOM & REP. OF IRELAND
Sales Dept:
sales@vortice.ltd.uk
Technical Dept:
technical@vortice.ltd.uk

OTHER COUNTRIES
Sales Dept:
export@vortice-italy.com
After Sales:
after-sales@vortice-italy.com

Technical Data Sheet

CODE 41459

E 604 M

Low-pressure plate axial fans

Description

• Nominal diameter 600 mm
• Wall-mounting panel manufactured from phosphated pressed steel, polyester powder coated with hammered effect finish, guaranteeing long-term resistance to atmospheric agents.
• Ventilation port fashioned in one piece with the panel and gauged to optimize air flow.
• Protective grille (in accordance with UNI ISO 13857 standard) combining the function of motor bracket, made of electrically welded steel with epoxy paint finish, colour black. Easy removal simplifies maintenance and cleaning of the fan.
• 1 speed asynchronous single phase AC motor with shaft turning in double shielded ball bearings, insulation class F.
• Maximum air flow: 7,000 m3/h.
• Impeller with 6 wing profile blades keyed to a diecast aluminium hub and dynamically balanced (UNI ISO 1940 – Balancing class 6.3), optimized to deliver maximum performance and low noise levels, moulded from filled polypropylene for superior dimensional stability and resistance to atmospheric agents.
• Vortice speed controller.

Accessories

IRM 30

IRM 30
Code 12921



IREM 3 CD 99250080
Code 12931



IREM 5 CD 99250081
Code 12932



IREM 9 CD 99250082
Code 12933



PGR 600 (PERSIANA GRAVITA')
Code 50650

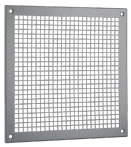

TRA 600 (TELAIO CON RETE ANTINF.)
Code 51650



IREM INVERTER 4 M
Code 12815

PER INFORMAZIONI / FOR INFORMATION

ITALY
Pre Sales:
prevendita@vortice-italy.com
After Sales:
postvendita@vortice-italy.com

UNITED KINGDOM & REP. OF IRELAND
Sales Dept:
sales@vortice.ltd.uk
Technical Dept:
technical@vortice.ltd.uk

OTHER COUNTRIES
Sales Dept:
export@vortice-italy.com
After Sales:
after-sales@vortice-italy.com