Technical Data Sheet

CODE 41457

E 604 T

Low-pressure plate axial fans



Certifications

EAC

Technical and performance data

Absorbed current at 220 V (A)	1,00
Absorbed current at 240 V (A)	1,00
Absorbed current at 380 V (A)	0,62
Absorbed current at 415 V (A)	0,62
Absorbed power at 220-380 V (W)	360
Absorbed power at 240-415 V (W)	380
Frequency (Hz)	50
Insulation class	I°
Max absorbed current (A)	1,00
Max absorbed power (W)	380
Max ambient temperature for continuous operation (°C)	70

Max temperature of exhaust air (continuous operation)	70
Motor protection IP	44
Nominal diameter (mm)	630
Number of poles	4
Voltage (V)	220/380 240/415
Weight (Kg)	10
Max airflow (l/s)	2139
Max airflow (m³/h)	7700
Max pressure (mmH2O)	14,5
Max pressure (Pa)	142
RPM	1400

Dimensions

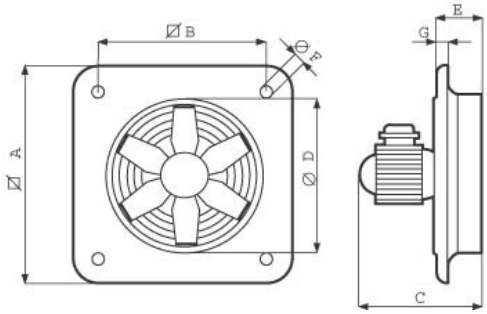

Ø (mm)	630
Size A (mm)	760
Size B (mm)	630
Size C (mm)	283
Size D (mm)	Ø 610
Size D3 (mm)	Ø 600
Size E (mm)	100
Size F (mm)	12
Size G (mm)	15

PER INFORMAZIONI / FOR INFORMATION

ITALY
Pre Sales:
prevendita@vortice-italy.com
After Sales:
postvendita@vortice-italy.com

UNITED KINGDOM & REP. OF IRELAND
Sales Dept:
sales@vortice.ltd.uk
Technical Dept:
technical@vortice.ltd.uk

OTHER COUNTRIES
Sales Dept:
export@vortice-italy.com
After Sales:
after-sales@vortice-italy.com

Technical Data Sheet

CODE 41457

E 604 T

Low-pressure plate axial fans

Description

• Nominal diameter 600 mm
• Wall-mounting panel manufactured from phosphated pressed steel, polyester powder coated with hammered effect finish, guaranteeing long-term resistance to atmospheric agents.
• Ventilation port fashioned in one piece with the panel and gauged to optimize air flow.
• Protective grille (in accordance with UNI ISO 13857 standard) combining the function of motor bracket, made of electrically welded steel with epoxy paint finish, colour black. Easy removal simplifies maintenance and cleaning of the fan.
• 1 speed asynchronous three-phase AC motor with shaft turning in double shielded ball bearings, insulation class F.
• Maximum air flow: 7,700 m3/h.
• Impeller with 6 wing profile blades keyed to a diecast aluminium hub and dynamically balanced (UNI ISO 1940 – Balancing class 6.3), optimized to deliver maximum performance and low noise levels, moulded from filled polypropylene for superior dimensional stability and resistance to atmospheric agents.
• Vortice speed controller.

Accessories



IRT 15
Code 12923



PGR 600 (PERSIANA GRAVITA')
Code 50650



TRA 600 (TELAIO CON RETE ANTINF.)
Code 51650



IRET INVERTER 2,5 M
Code 12816

PER INFORMAZIONI / FOR INFORMATION

ITALY
Pre Sales:
prevendita@vortice-italy.com
After Sales:
postvendita@vortice-italy.com

UNITED KINGDOM & REP. OF IRELAND
Sales Dept:
sales@vortice.ltd.uk
Technical Dept:
technical@vortice.ltd.uk

OTHER COUNTRIES
Sales Dept:
export@vortice-italy.com
After Sales:
after-sales@vortice-italy.com