# KDE12T PARTS CATALOGUE

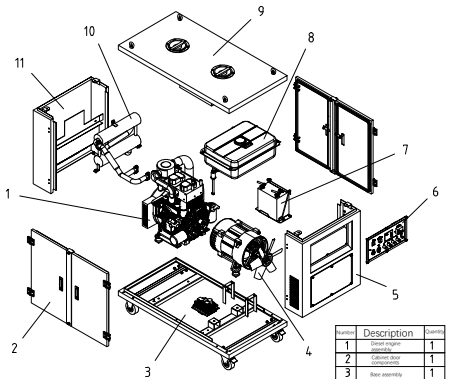

| Number | Description | Quantity |
|---|---|---|
| 1 | Diesel engine assembly | 1 |
| 2 | Cabinet door components | 1 |
| 3 | Base assembly | 1 |
| 4 | Alternator assembly | 1 |
| 5 | Rear end board assembly | 1 |
| 6 | Control assembly | 1 |
| 7 | Battery assembly | 1 |
| 8 | Fuel tank assembly | 1 |
| 9 | Upper cover assembly | 1 |
| 10 | Muffler assembly | 1 |
| 11 | Front end board assembly | 1 |

## 1.Diesel engine assembly

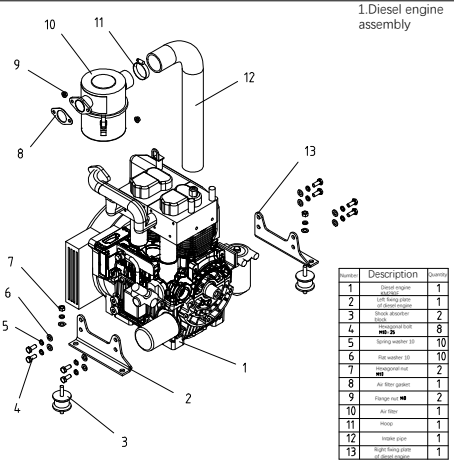

| Number | Description | Quantity |
|---|---|---|
| 1 | Diesel engine assembly | 1 |
| 2 | Left flang plate of diesel engine | 1 |
| 3 | Shock absorber block | 2 |
| 4 | Hexagonal bolt M10×25 | 8 |
| 5 | Spring washer 10 | 10 |
| 6 | Flat washer 10 | 10 |
| 7 | Hexagonal nut M10 | 2 |
| 8 | Air filter gasket | 1 |
| 9 | Flange nut M8 | 2 |
| 10 | Air filter | 1 |
| 11 | Hoop | 1 |
| 12 | Intake pipe | 1 |
| 13 | Right flang plate of diesel engine | 1 |

## 2.Cabinet door assembly

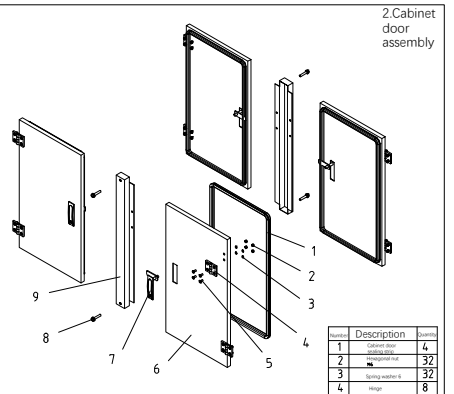

| Number | Description | Quantity |
|---|---|---|
| 1 | Cabinet door sealing strip | 4 |
| 2 | Hexagonal nut M6 | 32 |
| 3 | Spring washer 6 | 32 |
| 4 | Hinge | 8 |
| 5 | Countersunk screw M6×16 | 32 |
| 6 | Cabinet door | 4 |
| 7 | Door lock | 4 |
| 8 | Cabinet door column | 2 |
| 9 | Flange bolt M8×45 | 4 |

## 3.Base assembly

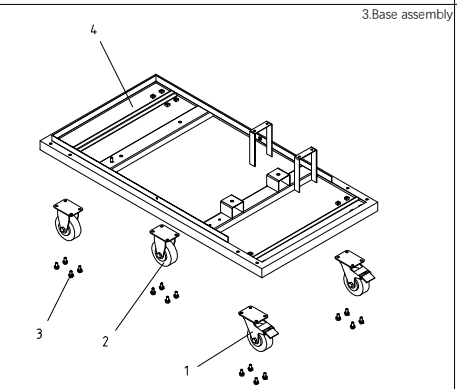

| Number | Description | Quantity |
|---|---|---|
| 1 | 2-inch movable wheel | 2 |
| 2 | 4-inch fixed wheel | 2 |
| 3 | Flange bolt M8×16 | 16 |
| 4 | Base | 1 |

## 4.Alternator assembly

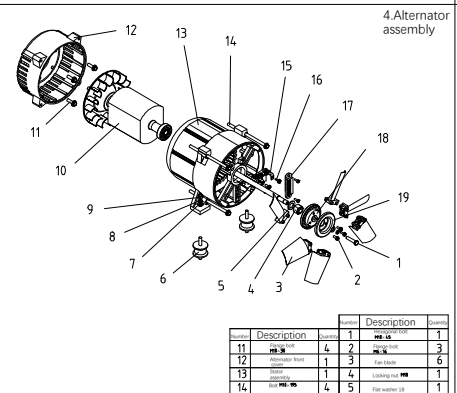

| Number | Description | Quantity |
|---|---|---|
| 11 | Flange bolt M8×30 | 4 |
| 12 | Alternator front bracket | 1 |
| 13 | Stator assembly | 1 |
| 14 | Rotor M10×105 | 4 |
| 15 | Carbon brush | 1 |
| 16 | Flange nut M6×12 | 4 |
| 17 | Mixing board | 1 |
| 18 | Fan blade front pressure block | 1 |
| 19 | Fan blade back pressure block | 1 |

| Number | Description | Quantity |
|---|---|---|
| 1 | Hexagonal bolt M10×65 | 1 |
| 2 | Flange bolt M8×16 | 3 |
| 3 | Fan blade | 6 |
| 4 | Locking nut M10 | 1 |
| 5 | Flat washer 18 | 1 |
| 6 | Shock absorber block | 2 |
| 7 | Flat washer 10 | 3 |
| 8 | Spring washer 10 | 3 |
| 9 | Hexagonal nut M10 | 2 |
| 10 | Rotorassembly | 1 |

## 5.Rear end board assembly

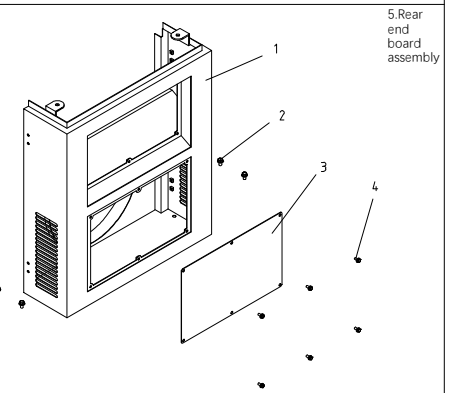

| Number | Description | Quantity |
|---|---|---|
| 1 | Rear end board | 1 |
| 2 | Flange bolt M8×12 | 4 |
| 3 | Rear end plate | 1 |
| 4 | Flange bolt M6×12 | 6 |

## 6.Control assembly

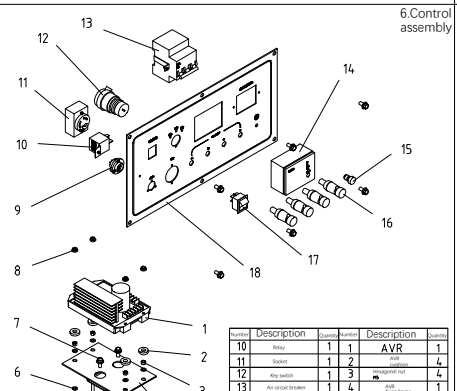

| Number | Description | Quantity | Number | Description | Quantity |
|---|---|---|---|---|---|
| 10 | Relay | 1 | 1 | AVR | 1 |
| 11 | Socket | 1 | 2 | AVR cushion | 4 |
| 12 | Key switch | 1 | 3 | Hexagonal nut M5 | 4 |
| 13 | Air circuit breaker | 1 | 4 | AVR fixing frame | 1 |
| 14 | Display meter | 1 | 5 | Hexagonal bolt M6×20 | 4 |
| 15 | Grounded receptacle | 1 | 6 | Flat washer 5 | 8 |
| 16 | Output receptacle | 4 | 7 | Flange bolt M6×12 | 8 |
| 17 | Electric switch | 1 | 8 | Flange nut M5 | 4 |
| 18 | Control panel | 1 | 9 | ATS connector | 1 |

## 7.Battery assembly

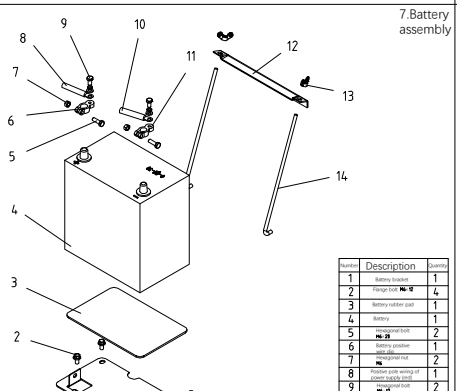

| Number | Description | Quantity |
|---|---|---|
| 1 | Battery bracket | 1 |
| 2 | Flange bolt M6×12 | 4 |
| 3 | Battery rubber pad | 1 |
| 4 | Battery | 1 |
| 5 | Hexagonal bolt M10×25 | 2 |
| 6 | Battery positive wire clip | 1 |
| 7 | Hexagonal nut M6 | 2 |
| 8 | Positive pole wiring of power supply joint | 1 |
| 9 | Hexagonal bolt M6×12 | 2 |
| 10 | Power grounded wire clip(A) | 1 |
| 11 | Battery negative electrode wire clip | 1 |
| 12 | Battery pressure plate | 1 |
| 13 | Butterfly nut M6 | 2 |
| 14 | Battery pull rod | 2 |

## 8.Fuel tank assembly

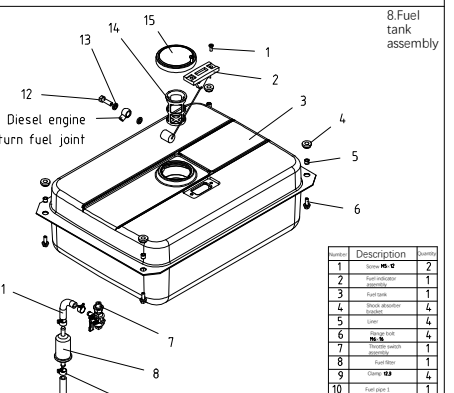


| Number | Description | Quantity |
|---|---|---|
| 1 | Screw M6×12 | 2 |
| 2 | Fuel indicator assembly | 1 |
| 3 | Fuel tank | 1 |
| 4 | Shock absorber bracket | 4 |
| 5 | Liner | 4 |
| 6 | Flange bolt M6×16 | 4 |
| 7 | Throttle switch assembly | 1 |
| 8 | Fuel filter | 1 |
| 9 | Clamp 12.5 | 4 |
| 10 | Fuel pipe 1 | 1 |
| 11 | Fuel pipe 2 | 1 |
| 12 | Flange bolt M8 | 1 |
| 13 | Combination sealing gasket | 2 |
| 14 | Fuel filter screen | 1 |
| 15 | Fuel tank cover | 1 |

## 9.Upper cover assembly

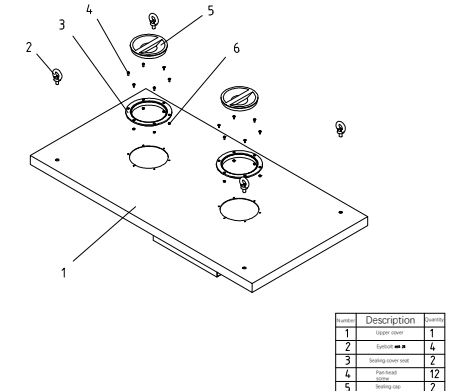

| Number | Description | Quantity |
|---|---|---|
| 1 | Upper cover | 1 |
| 2 | Eyebolt M8×30 | 4 |
| 3 | Sealing cover seat | 2 |
| 4 | Pan-head screw | 12 |
| 5 | Sealing cap | 2 |
| 6 | Hexagonal nut M6 | 12 |

## 10.Muffler assembly

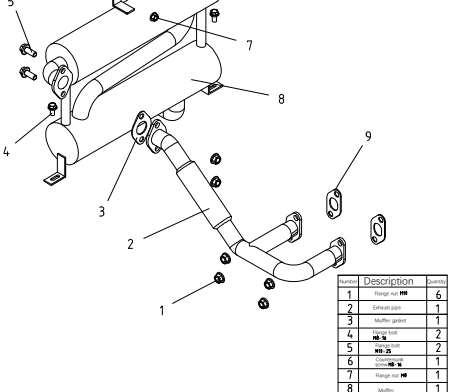

| Number | Description | Quantity |
|---|---|---|
| 1 | Flange nut M10 | 6 |
| 2 | Exhaust pipe | 1 |
| 3 | Muffler gasket | 1 |
| 4 | Flange bolt M8×16 | 2 |
| 5 | Flange bolt M10×25 | 2 |
| 6 | Countersunk screw M8×16 | 1 |
| 7 | Flange nut M8 | 1 |
| 8 | Muffler | 1 |
| 9 | Exhaust pipe gasket | 2 |

## 11.Front end board assembly

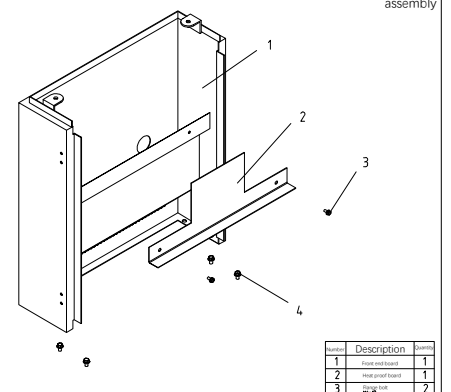

| Number | Description | Quantity |
|---|---|---|
| 1 | Front end board | 1 |
| 2 | Heat-proof board | 1 |
| 3 | Flange bolt M6×12 | 2 |
| 4 | Flange bolt M8×12 | 4 |

WUXI WORLDBEST KAMA POWER CO., LTD

ADD: No.88 Dingzhuang Road, Yangshan Town, Wuxi City, Jiangsu Province, China
TEL: 0510-83953688 FAX: 0510-83308103

231130版