STIGA

SBP 375 (2019)

255175102/S17

Spare parts list
Reservdelar
Repuestos
Ersatzteile
Pièces détachées
Reserve onderdelen
Catalogo ricambi

● Use ST. S.p.A. Genuine Spare Parts specified in the parts list for repair and/or replacement.
● The contents described in the parts list may change due to improvement.
● The drawings of the spare parts are only indicative And might Not represent the part in question exactly.
● The indications "right" - "left" - "front" - "rear" refer to the position of the operator when using the machine.
● When placing orders of parts for repair And/Or replacement, make sure that the illustrated parts list Is the one applying to the machine's year of manufacture, as shown on the identification plate attached to the machine.

All rights reserved. No part Of this material may be reproduced Or transmitted, in any form Or by any means, electronic Or mechanical, including photocopying, recording Or by any information storage And retrieval system, without permision in writing from ST. S.p.A.

Copyright ST. S.P.A.

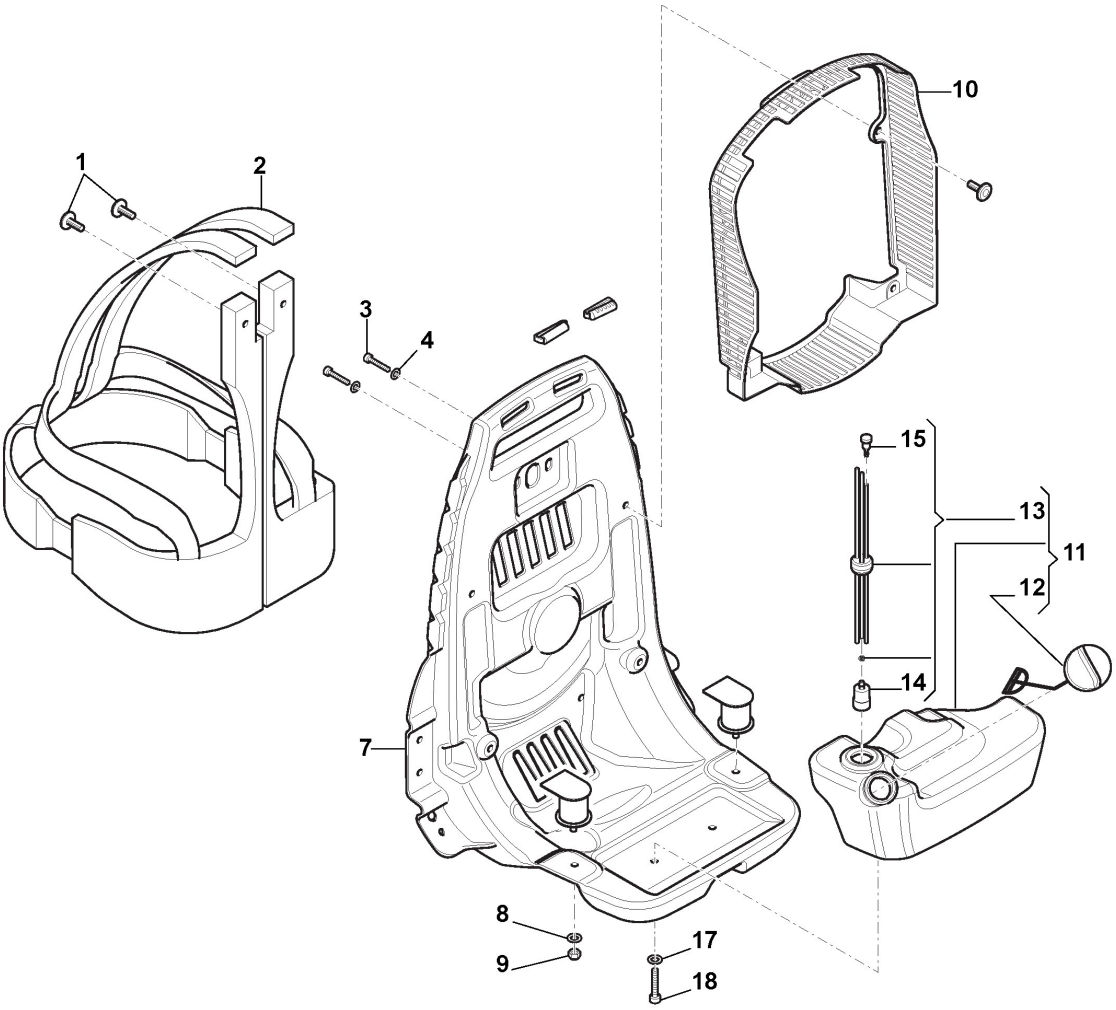

Copyright ST. S.P.A.

Back-Pack Support, Harness, Fuel Tank

Ref.nr.	Qty	Item number	Description	Notes	From	Up to
1	1	118804500/0	Rock Rivet			
2	1	118804501/0	Harness			
3	2	112760475/0	Screw			
4	2	112523020/0	Washer			
7	1	118804497/0	Back-Pack Support			
8	2	112523040/0	Washer			
9	2	112154510/0	Nut			
10	1	118804498/0	Guard Assy			
11	1	118804508/0	Fuel Tank Assy			
12	1	118804510/0	Fuel Tank Cap			
13	1	118804509/0	Grommet Assy			
14	1	118804414/0	Intake Filter			
15	1	118804415/0	Breather Valve Assy			
17	2	112523020/0	Washer			
18	2	2135180	Screw			

Copyright ST. S.P.A.

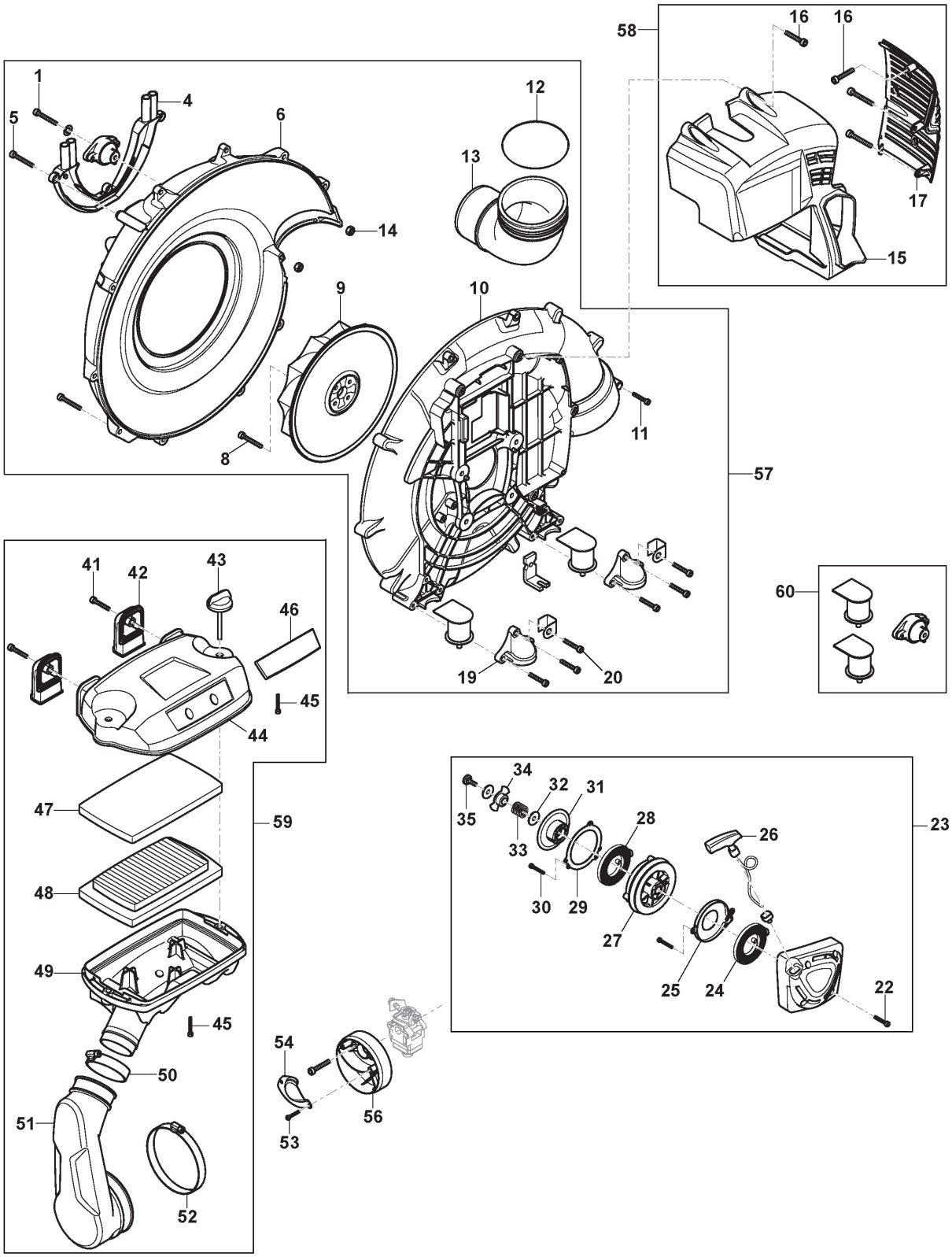

Copyright ST. S.P.A.

Volute Case, Air Filter, Starter Assy

Ref.nr.	Qty	Item number	Description	Notes	From	Up to
1	1	2135130	Screw			
4	1	118804476/0	Cover			
5	3	112728522/0	Screw			
6	1	118804471/0	Volute Case 1			
8	4	2132180	Screw			
9	1	118804477/0	Impeller			
10	1	118804474/0	Volute Case 2			
11	2	2135220	Screw			
12	1	118804502/0	O-Ring			
13	1	118804469/0	Elbow			
14	2	112154330/0	Nut			
15	1	118804428/0	Engine Cover, Yellow			
16	7	112728522/0	Screw			
17	1	118804429/0	Muffler Guard			
19	2	118804468/0	Cover			
20	6	112728522/0	Screw			
22	4	2135060	Screw			
23	1	118804505/1	Starter Assy			
24	1	118804467/0	Starter Spring			
25	1	118804461/0	Spring Cover			
26	1	118804416/0	Starter Handle, Yellow			
27	1	118804459/0	Starter Pulley			
28	1	118804466/0	Spring			
29	1	118804464/0	Spring Cover			
30	3	112735106/0	Screw			
31	1	118804460/0	Starter Wheel			
32	1	112523030/0	Washer			
33	1	118804462/0	Spring			
34	1	118804463/0	Plate			
35	1	118804465/0	Screw			
41	2	112728522/0	Screw			
42	2	118804447/0	Cover, Yellow			
43	2	118804453/0	Lock Knob			
44	1	118804446/0	Air Filter Cover, Yellow			
45	2	112735106/0	Screw			
46	1	118804448/0	Marking Plate (STIGA)			
47	1	118804445/0	Sponge Filter			
48	1	118804444/0	Paper Filter Element			
49	1	118804452/0	Air Cleaner Base			
50	1	118804449/0	Hose Clamp			
51	1	118804443/0	Air Duct Cleaner			
52	1	118804450/0	Hose Clamp			
53	2	112735106/0	Screw			
54	1	118804442/0	Intake Plate			
56	1	118804451/0	Intake Case Assy			

Copyright ST. S.P.A.

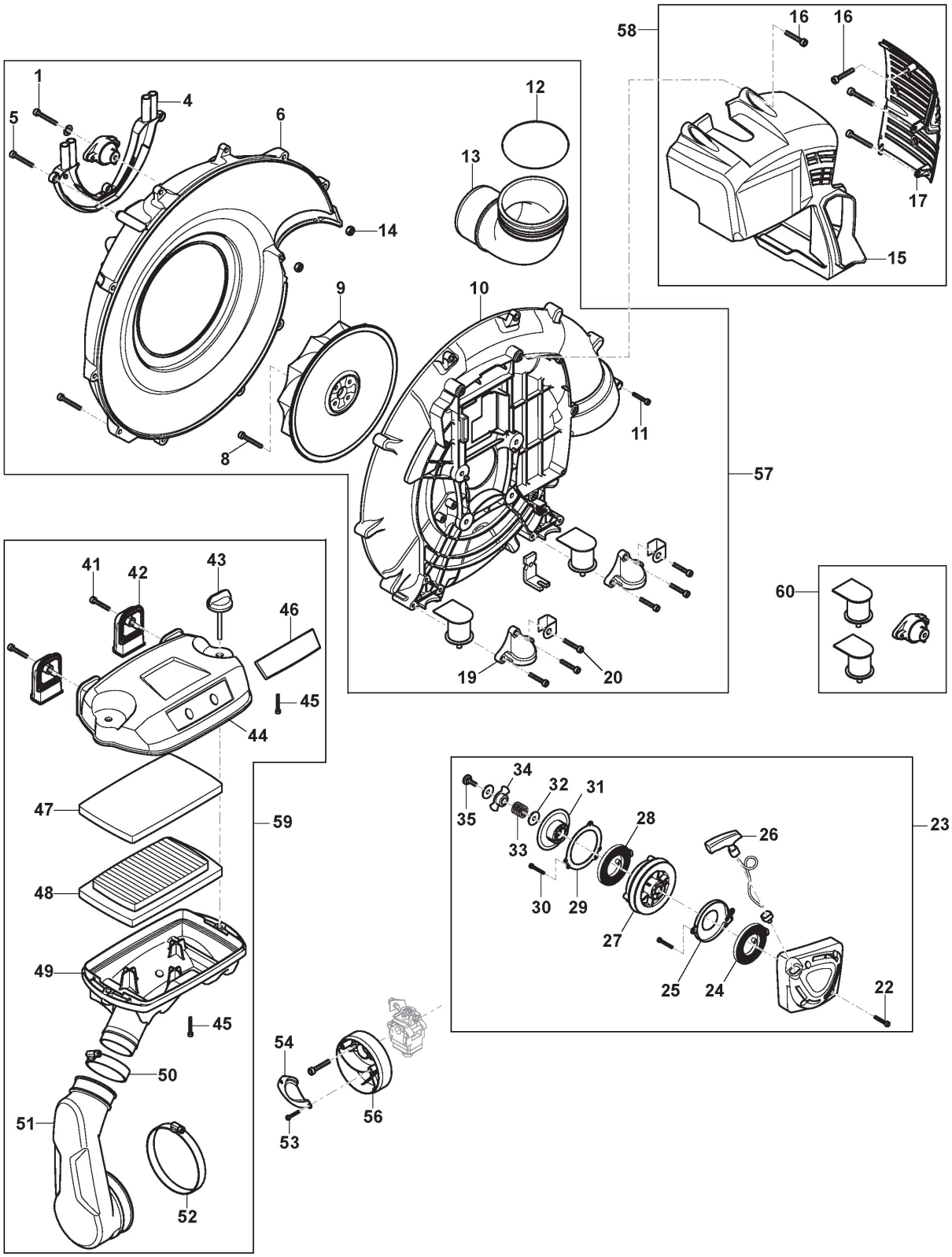

Copyright ST. S.P.A.

Volute Case, Air Filter, Starter Assy

Ref.nr.	Qty	Item number	Description	Notes	From	Up to
57	1	118804972/0	Semi-Volute Assy			
58	1	118804973/0	Cylinder Cover Assy			
59	1	118804975/0	Air Filter Assy			
60	1	118805077/0	Anti-Vibration Kit			

Copyright ST. S.P.A.

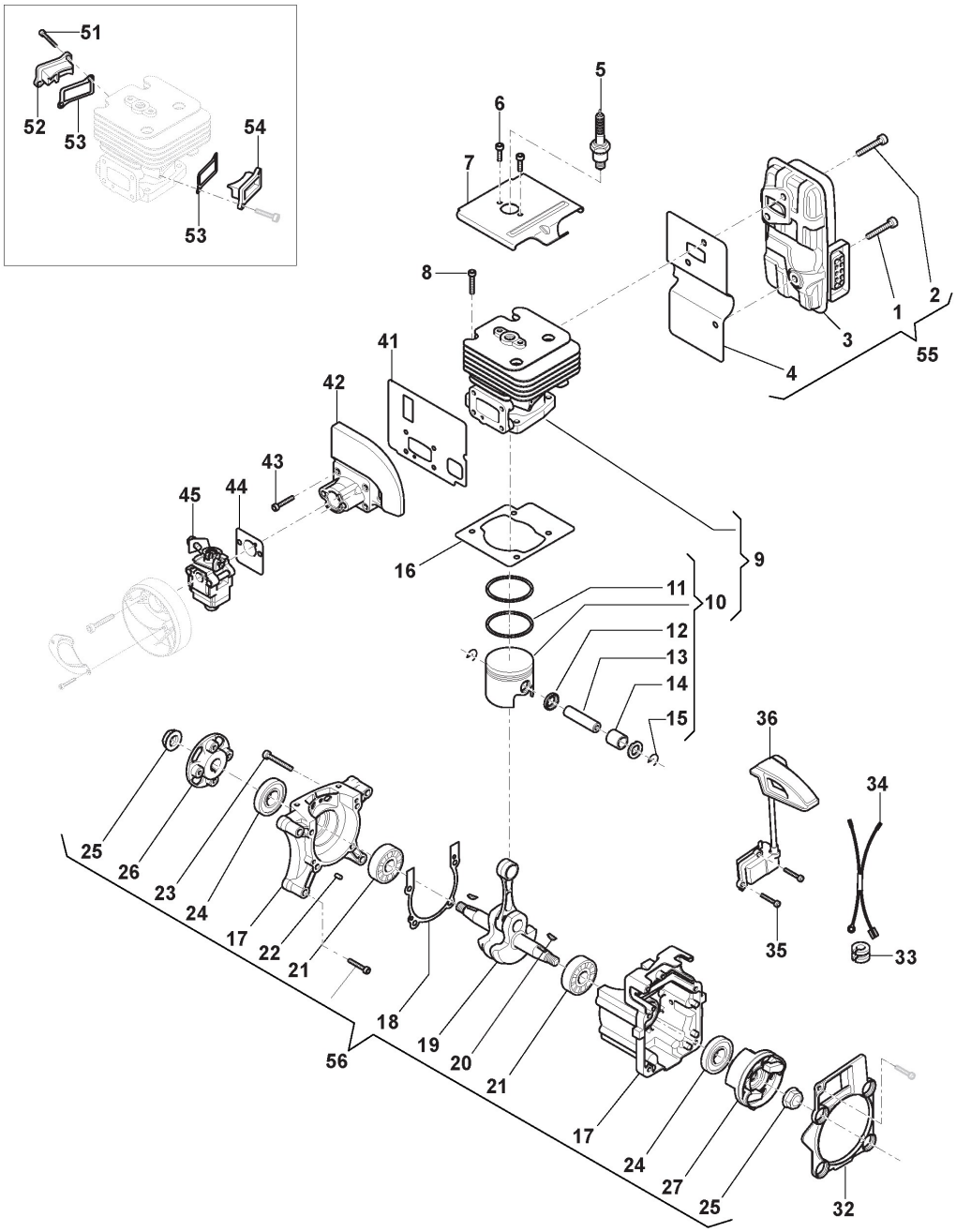

Copyright ST. S.P.A.

Crankshaft, Cylinder-Piston Assy, Carburetor

Ref.nr.	Qty	Item number	Description	Notes	From	Up to
1	1	2132180	Screw			
2	2	2132180	Screw			
3	1	118804454/0	Muffler			
4	1	118804426/0	Muffler Gasket			
5	1	123051000/0	Spark Plug			
6	2	2653090	Screw			
7	1	118804423/0	Plate			
8	4	2135060	Screw			
9	1	118804507/0	Cylinder - Piston Ass'Y	until Serial No. 19DC1BLO100684		
9	1	118804507/1	Cylinder - Piston Ass'Y	from Serial No. 19DC1BLO100685		
10	2	118804506/0	Piston Assy			
11	2	118804436/0	Piston Ring			
12	2	118804439/0	Washer-Piston			
13	1	118804437/0	Piston Pin			
14	1	118804440/0	Needle Bearing			
15	2	118804438/0	Circlip			
16	1	118804422/0	Cylinder Gasket			
17	1	118804504/0	Crankcase Assy			
18	1	118804435/0	Crankcase Gasket			
19	1	118804441/0	Crankshaft			
20	2	3151050	Flywheel Key			
21	2	118800368/0	Bearing			
22	2	118801158/0	Pin			
23	4	2135130	Screw			
24	2	118804418/0	Seal Ring			
25	2	9739-1031-22	Nut			
26	1	118804427/0	Coupling			
27	1	118804458/0	Flywheel			
32	1	118804431/0	Cover			
33	1	118804456/0	Grommet			
34	1	118804457/0	Coil Cable			
35	2	123878021/0	Screw			
36	1	118804455/0	Electronic Coil			
41	1	118804424/0	Intake Manifold Gasket			
42	1	118804433/0	Intake Manifold			
43	4	2135050	Screw			
44	1	118804425/0	Carburetor Gasket			
45	1	118804434/0	Carburettor			
51	5	123878021/0	Screw			
52	1	118804420/0	Cylinder rear plug	until Serial No. 19DC1BLO100684		
52	1	118805161/0	Cylinder rear plug	from Serial No. 19DC1BLO100685		
53	2	118804421/0	Gasket	until Serial No. 19DC1BLO100684		

Copyright ST. S.P.A.

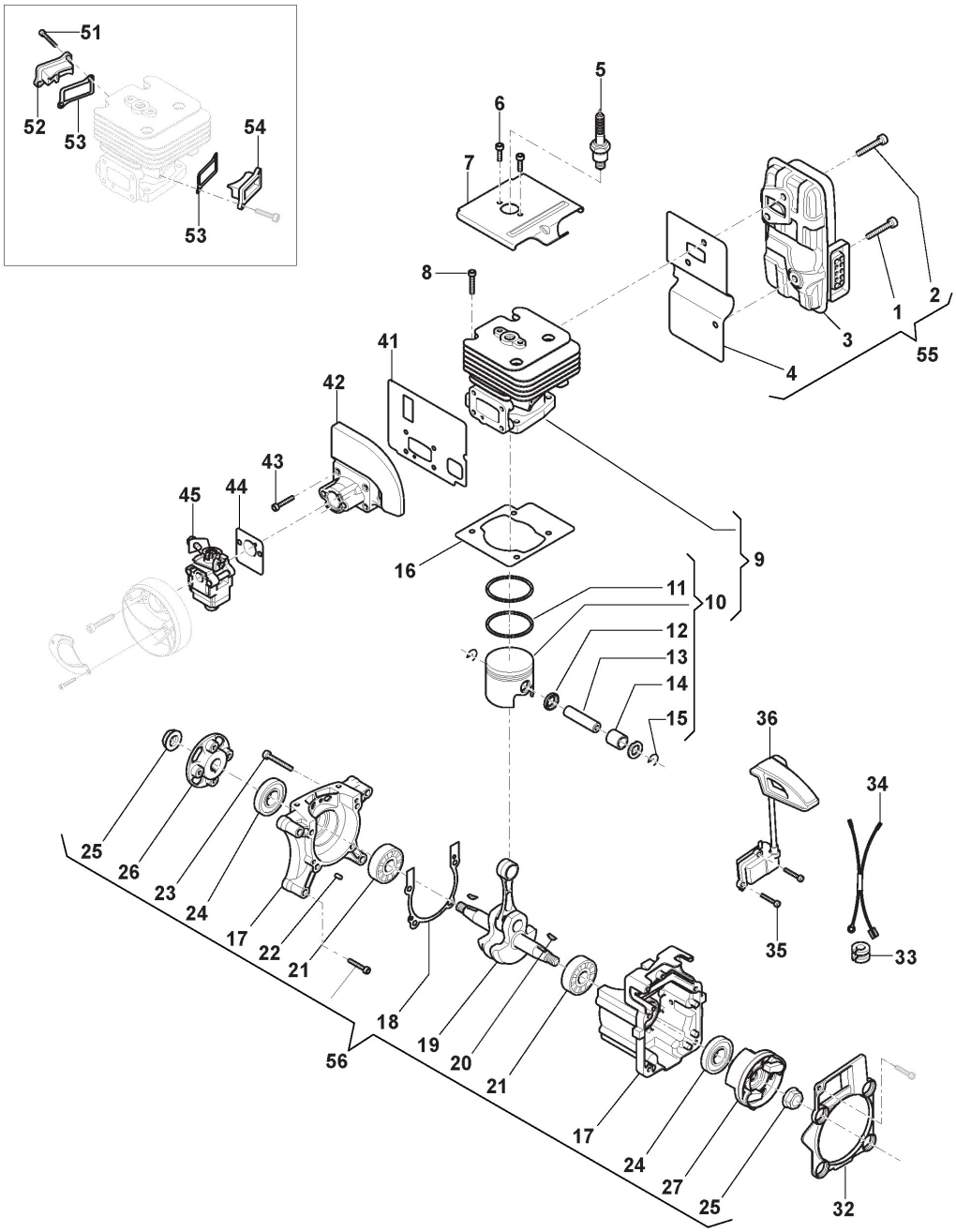

Copyright ST. S.P.A.

Ref.nr.	Qty	Item number	Description	Notes	From	Up to
53	2	118805162/0	Gasket	from Serial No. 19DC1BLO100685		
54	1	118804419/0	Cylinder front plug	until Serial No. 19DC1BLO100684		
54	1	118805160/0	Cylinder front plug	from Serial No. 19DC1BLO100685		
55	1	118804974/0	Muffler Assy			
56	1	118804976/0	Engine Short Block			

Copyright ST. S.P.A.

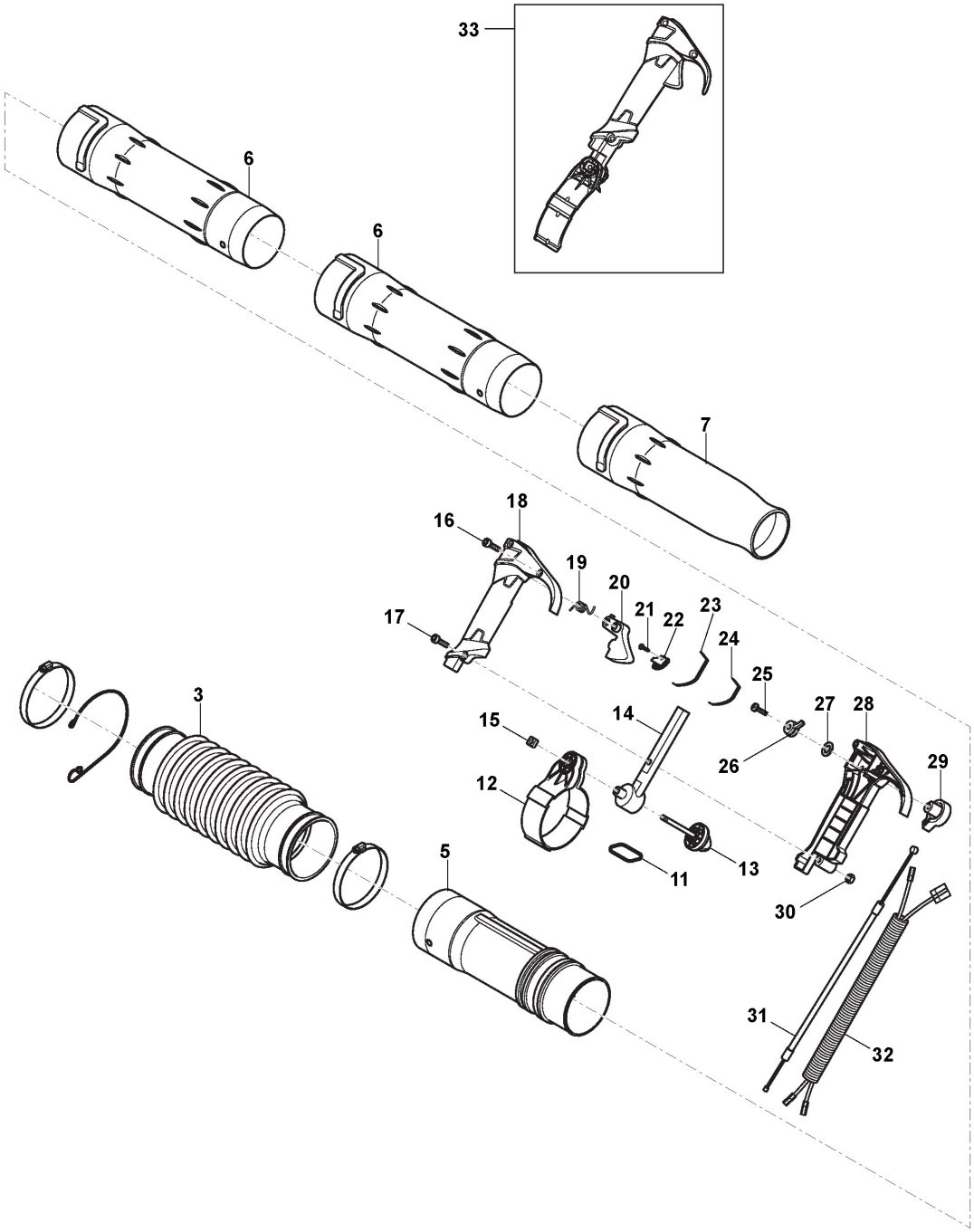

Copyright ST. S.P.A.

Tubes, Throttle Controls

Ref.nr.	Qty	Item number	Description	Notes	From	Up to
3	1	118804492/0	Flexible Pipe			
5	1	118804496/0	Rear Tube			
6	2	118804493/0	Intermediate Tube			
7	1	118804494/0	Round Nozzle			
11	1	118804480/0	Hook			
12	1	118804479/0	Handle Holder			
13	1	118804453/0	Lock Knob			
14	1	118804478/0	Support			
15	1	2461030	Nut			
16	2	112728518/0	Screw			
17	1	9947-0540-19	Screw			
18	1	118804489/0	Right Handgrip			
19	1	118804487/0	Throttle Lever Spring			
20	1	118804483/0	Throttle Lever			
21	1	112727356/0	Screw			
22	1	118804484/0	Plate			
23	1	118804486/1	Spring			
24	1	118804485/0	Spring			
25	1	112728099/1	Screw			
26	1	118804481/0	Throttle Control Lever			
27	1	118804503/0	Washer			
28	1	118804488/0	Left Handgrip			
29	1	118804482/0	Knob			
30	1	112291000/0	Nut			
31	1	118804491/0	Throttle Cable			
32	1	118804490/0	Switch wires			
33	1	118804977/0	Handle Assy			

Copyright ST. S.P.A.