PARTS LIST

MCV3501S(16)-01

CONTENTS

1. CYLINDER, CRANKSHAFT ..... 1 ~ 2
2. CRANKCASE ..... 3 ~ 4
3. CLUTCH, OIL PUMP ..... 5 ~ 6
4. MUFFLER, FUEL PIPE ..... 7 ~ 8
5. CARBURETOR ..... 9 ~ 10
6. ENGINE CASE ..... 11 ~ 12
7. RECOIL STARTER ..... 13 ~ 14
8. HANDLE ..... 15 ~ 16
9. LABEL, ACCESSORIES ..... 17 ~ 18

2014. 12.

MARUYAMA

P/N 523938

1. MCV3501S(16)-01
CYLINDER, CRANKSHAFT

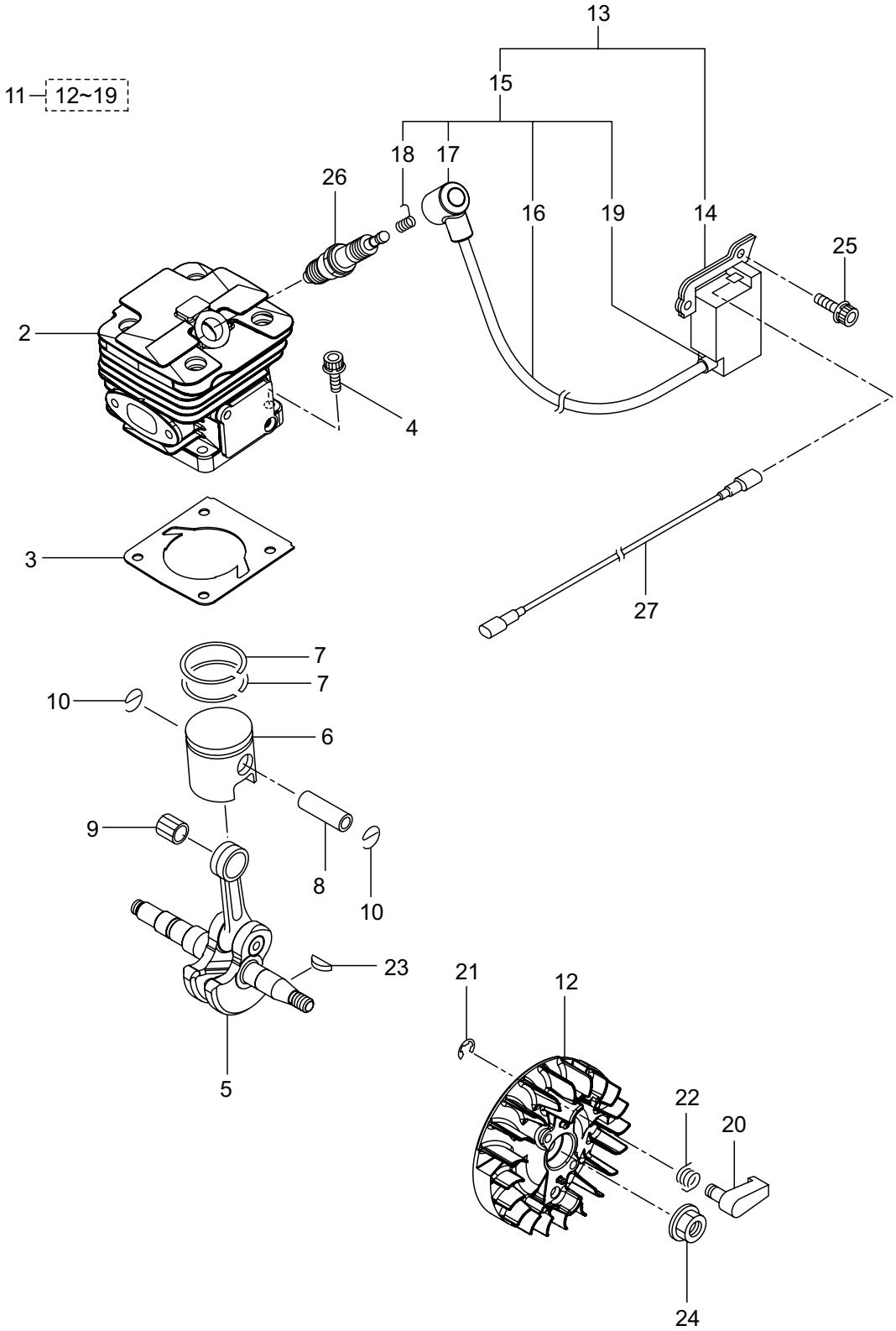

Ref. No.	Part No.	Part Name	Q'ty	Remarks
1-1	362850	MCV3501S(16)-01	1	
1-2	272688	Cylinder	1	
1-3	275220	Gasket	1	
1-4	261250	Cap Screw	4	M5x20
1-5	285867	Crank Shaft Comp	1	
1-6	285876	Piston	1	
1-7	285880	Piston Ring	2	
1-8	285881	Piston Pin	1	
1-9	285882	Bearing	1	
1-10	285883	Clip	2	
1-11	285884	Magneto Ass'y	1	Incl.12-19
1-12	285886	Magneto Rotor	1	
1-13	274027	Ignition Coil Ass'y	1	Incl.14-19
1-14	274028	Coil	1	
1-15	272825	Cord Ass'y	1	Incl.16-19
1-16	272826	Cord	1	
1-17	261074	Plug Boot	1	
1-18	261075	Connector	1	
1-19	261072	Cap	1	
1-20	285553	Starter Pawl	2	
1-21	020299	E-Ring	2	#4
1-22	285552	Spring	2	
1-23	261076	Woodruff Key	1	3x10
1-24	261417	Nut,Rotor	1	M8
1-25	281211	Cap Screw	2	M4x20
1-26	288264	Spark Plug	1	BPMR8Y
1-27	272827	Lead	1	

2. MCV3501S(16)-01
CRANKCASE

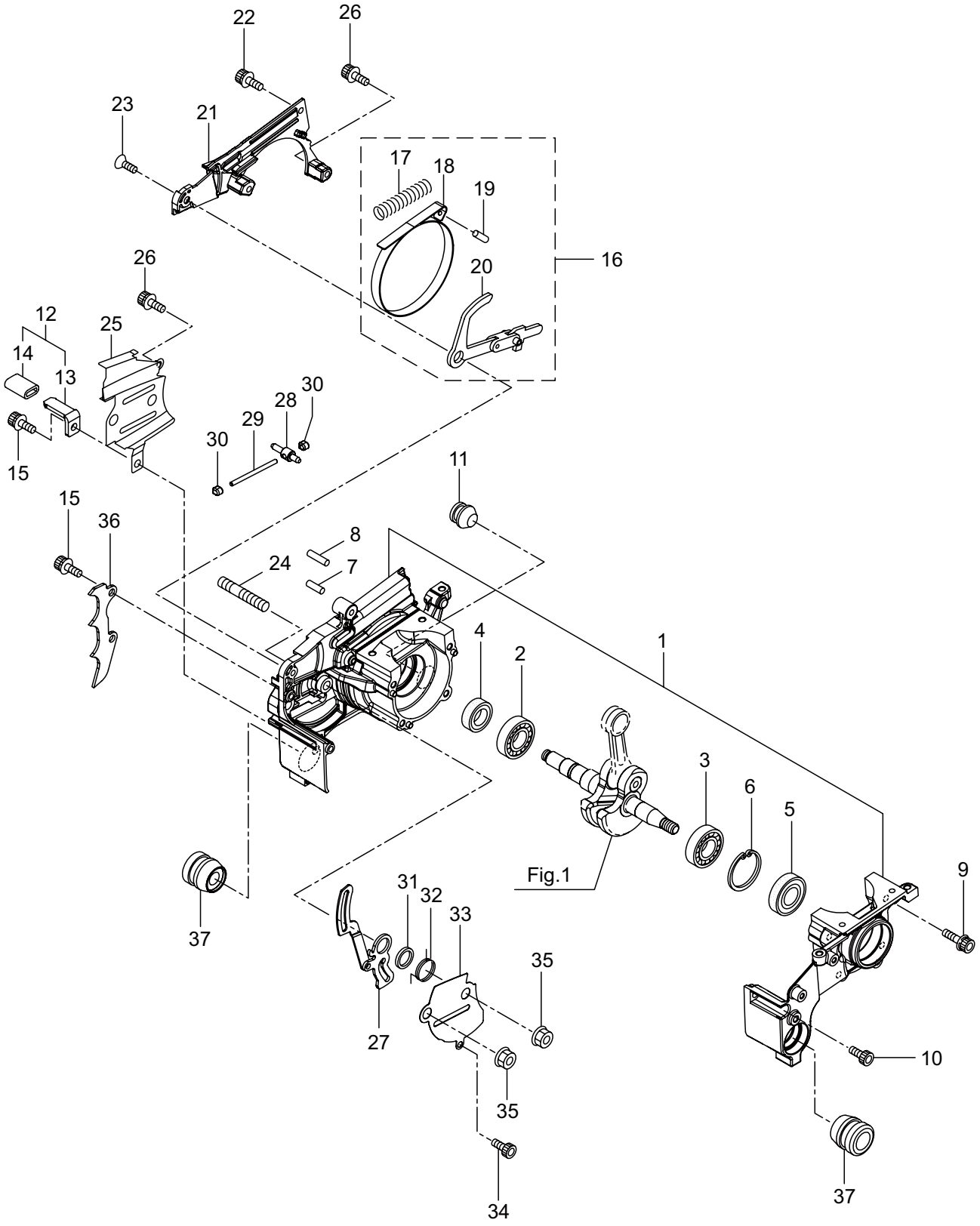

Ref. No.	Part No.	Part Name	Q'ty	Remarks
2-1	285858	Crankcase	1	
2-2	285863	Bearing	1	
2-3	285864	Bearing	1	
2-4	285865	Oil Seal	1	
2-5	261385	Oil Seal	1	ISCD12327
2-6	016732	Snap Ring	1	#32
2-7	285560	Pin	1	3x9.8
2-8	285529	Pin	1	3x13.8
2-9	261612	Cap Screw	4	M5x30
2-10	231871	Bolt	1	M5x12
2-11	285888	Cushion	1	
2-12	286803	Chain Catcher Ass'y	1	Incl.13,14
2-13	285583	Chain Catcher	1	
2-14	285585	Tube	1	7x10.5x18L
2-15	227817	Bolt	3	M5x12
2-16	272814	Brake Ass'y	1	Incl.17-20
2-17	285605	Spring	1	
2-18	285962	Band	1	
2-19	285560	Pin	1	3x9.8
2-20	285963	Lever Comp	1	
2-21	285960	Side Cover	1	
2-22	272817	Screw	1	M4x12
2-23	272818	Screw	1	M5x12
2-24	285970	Stud Bolt	2	
2-25	285866	Guide Plate L	1	
2-26	272816	Screw	2	M4x20
2-27	285966	Link Comp	1	
2-28	286671	Boss	1	
2-29	286672	Rod	1	
2-30	286673	Rod Guide	2	
2-31	285971	Washer	1	
2-32	273039	Spring	1	
2-33	285969	Cover	1	
2-34	272820	Screw	1	M4x8
2-35	285569	Nut	2	
2-36	285975	Spike	1	
2-37	285582	Buffer	2	

3. MCV3501S(16)-01
CLUTCH, OIL PUMP

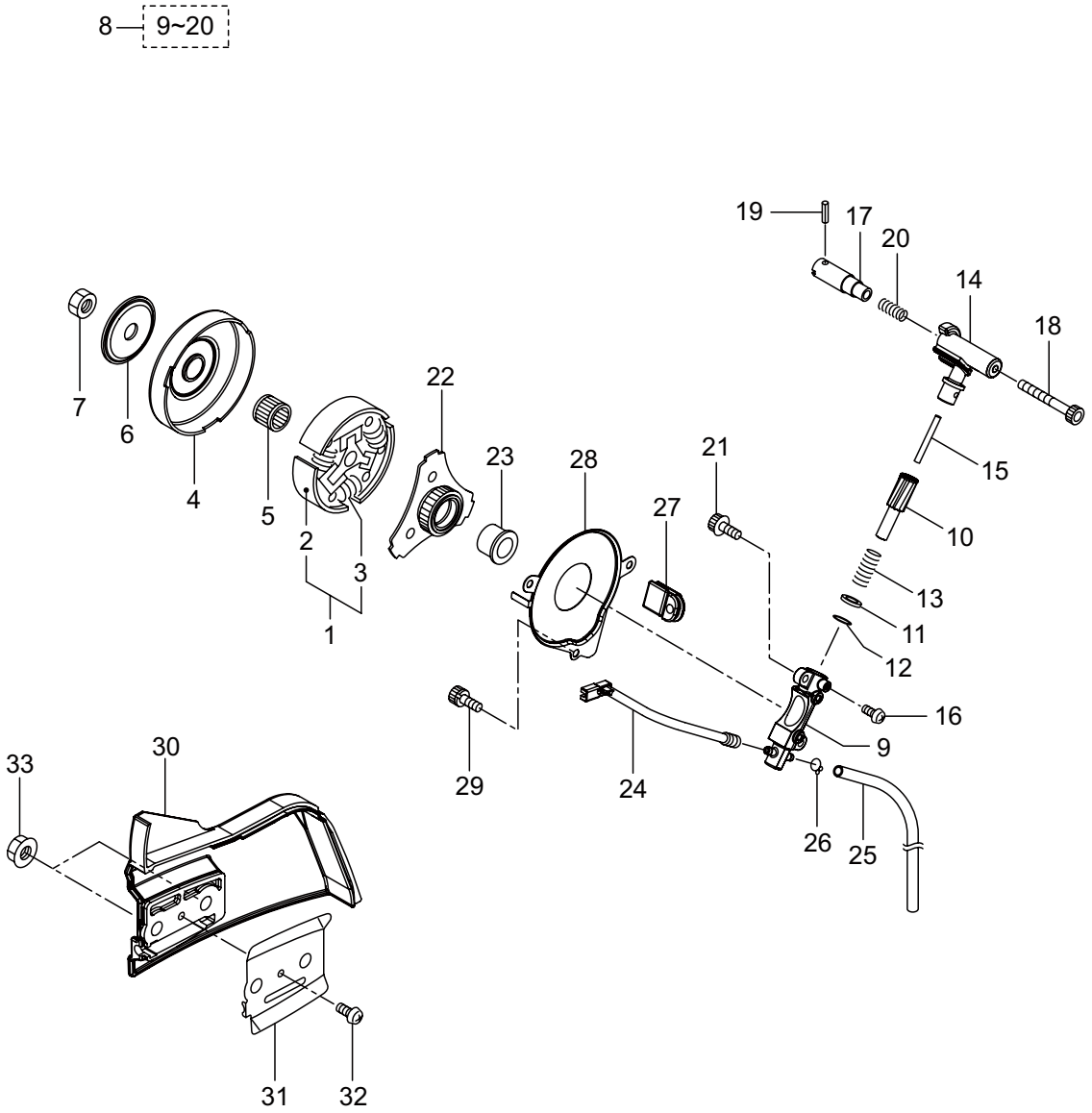

Ref. No.	Part No.	Part Name	Q'ty	Remarks
3-1	285915	Clutch Ass'y	1	Incl.2,3
3-2	285916	Clutch Shoe	3	
3-3	285917	Spring	3	
3-4	285896	Clutch Drum	1	
3-5	285625	Needle Bearing	1	10x13x10
3-6	285890	Washer	1	
3-7	285736	Nut	1	M8
3-8	272830	Oil Pump Ass'y	1	Incl.9-20
3-9	285899	Pump Body	1	
3-10	285909	Wheel Gear	1	
3-11	286801	Washer	1	t0.5 6.5x9.8
3-12	014759	O-Ring	1	P6
3-13	285551	Spring	1	
3-14	285901	Pump Cap	1	
3-15	272832	Rod	1	
3-16	285630	Screw	1	M3x8
3-17	285902	Cam	1	
3-18	272835	Screw	1	M4x40
3-19	272833	Spring Pin	1	
3-20	272834	Spring	1	
3-21	272815	Screw	2	M4x12
3-22	285891	Gear Comp	1	
3-23	285894	Bush	1	
3-24	285904	Oil Pipe A	1	
3-25	272836	Oil Pipe B	1	
3-26	261117	Clip	1	
3-27	285907	Grommet	1	
3-28	285908	Pump Cover	1	
3-29	285618	Bolt	1	M4x12
3-30	285958	Chain Case	1	
3-31	285961	Guide Plate R	1	
3-32	272873	Screw	1	M4x6
3-33	283041	Nut	2	M8

4. MCV3501S(16)-01
MUFFLER, FUEL PIPE

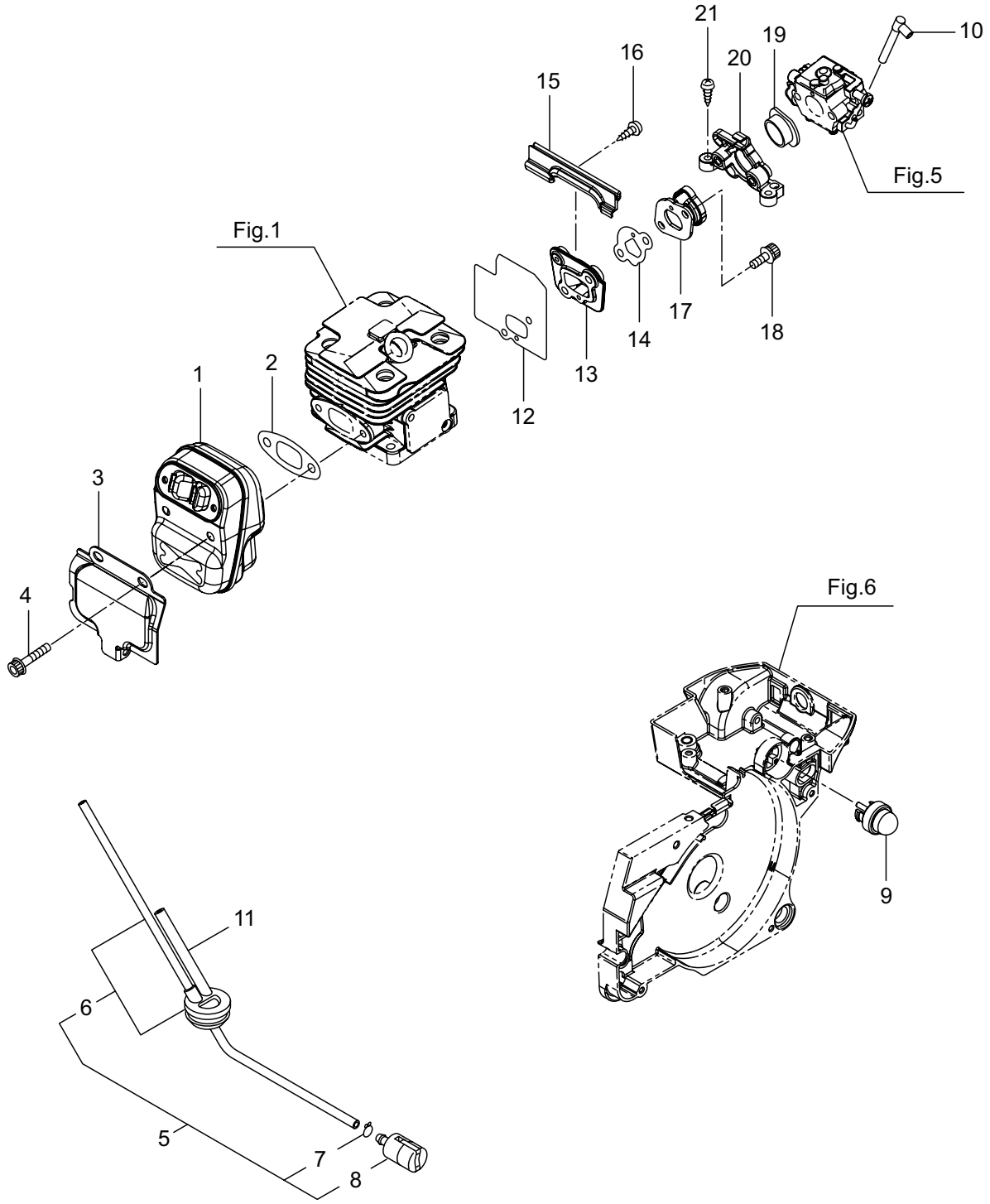

Ref. No.	Part No.	Part Name	Q'ty	Remarks
4-1	272786	Muffler Ass'y	1	
4-2	285914	Gasket	1	
4-3	273082	Maffler Guard	1	
4-4	272980	Screw	2	M6x55
4-5	272841	Fuel Pipe Ass'y	1	Incl.6-8
4-6	272842	Pipe Ass'y	1	
4-7	261117	Clip	1	
4-8	286749	Filter Ass'y	1	
4-9	282299	Pump	1	
4-10	275226	Fuel Pipe B	1	
4-11	272845	Fuel Pipe	1	
4-12	273352	Gasket	1	
4-13	285934	Insulator	1	
4-14	272872	Gasket	1	
4-15	285937	Packing	1	
4-16	285644	Screw	1	M4x12
4-17	285935	Insulator	1	
4-18	261246	Cap Screw	2	M5x25
4-19	286782	Ring	1	
4-20	285938	Plate	1	
4-21	285631	Screw	2	M4x16

5. MCV3501S(16)-01
CARBURETOR

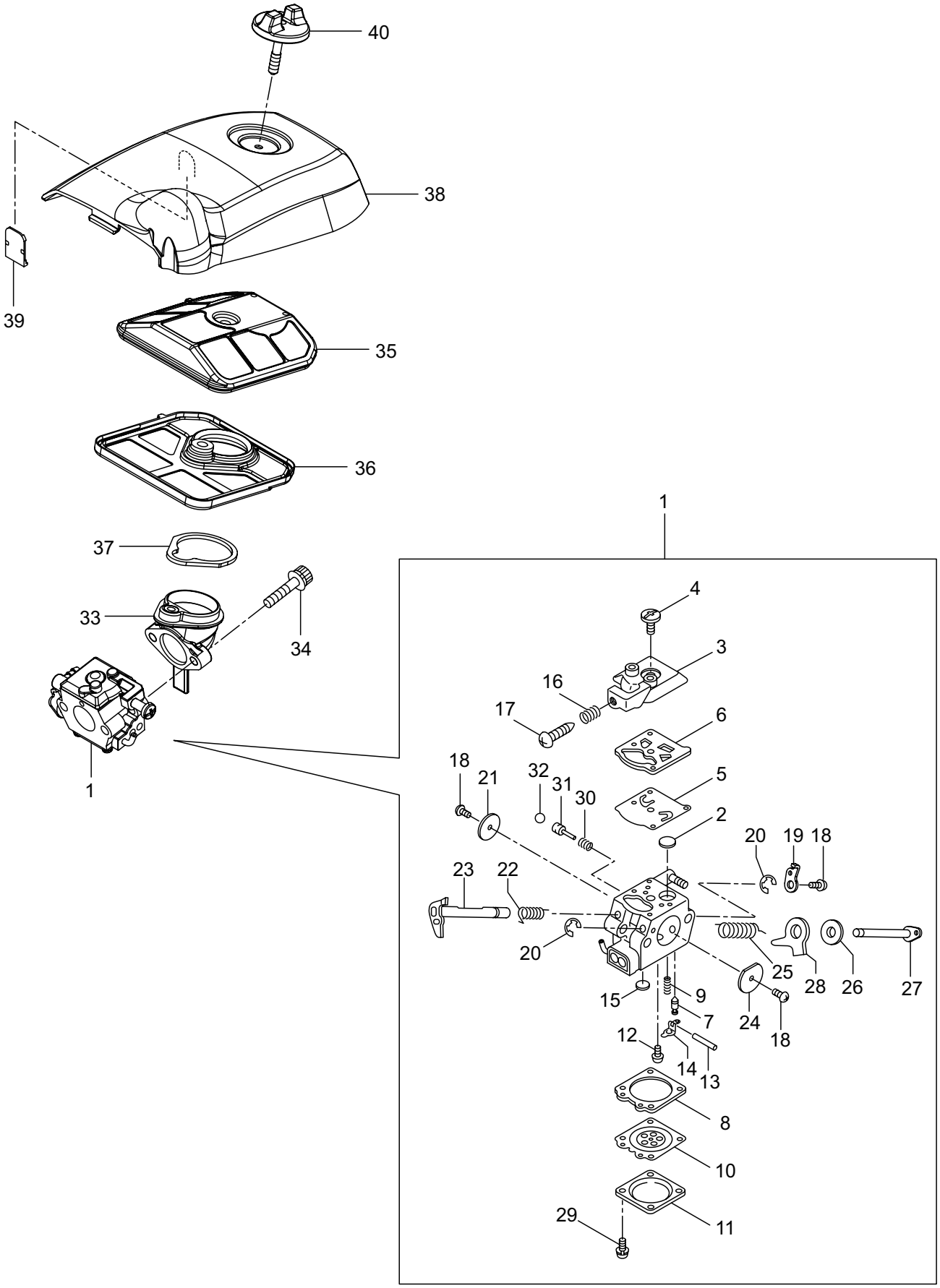

Ref. No.	Part No.	Part Name	Q'ty	Remarks
5-1	274865	Carburetor Ass'y	1	Incl.2-32
5-2	261872	Screen	1	
5-3	287168	Pump Cover	1	
5-4	287169	Screw	1	
5-5	287170	Diaphragm	1	
5-6	287171	Gasket	1	
5-7	262986	Needle Valve	1	
5-8	263727	Gasket	1	
5-9	287172	Spring	1	
5-10	283905	Diaphragm, Meterring	1	
5-11	263726	Cover Plate	1	
5-12	287173	Screw	1	
5-13	262989	Lever Pin	1	
5-14	262990	Lever	1	
5-15	287174	Plug	1	
5-16	287178	Spring	1	
5-17	287179	Idle Adjust Screw	1	
5-18	287180	Screw	3	
5-19	273376	Lever	1	
5-20	287182	Ring	2	
5-21	273377	Throttle Valve	1	
5-22	287185	Spring	1	
5-23	274088	Shaft	1	
5-24	287187	Choke Valve	1	
5-25	273379	Spring	1	
5-26	287189	Washer	1	
5-27	273380	Shaft	1	
5-28	289015	Lever	1	
5-29	287192	Screw	4	
5-30	273381	Spring	1	
5-31	273382	Piston	1	
5-32	273383	Ball	1	
5-33	285921	Boots	1	
5-34	261258	Bolt	2	M5x50
5-35	285924	Cleaner A	1	
5-36	285923	Cleaner B	1	
5-37	272981	Packing	1	
5-38	285933	Cleaner Cover	1	
5-39	285947	Shutter	1	
5-40	285905	Knob Bolt	1	

6. MCV3501S(16)-01
ENGINE CASE

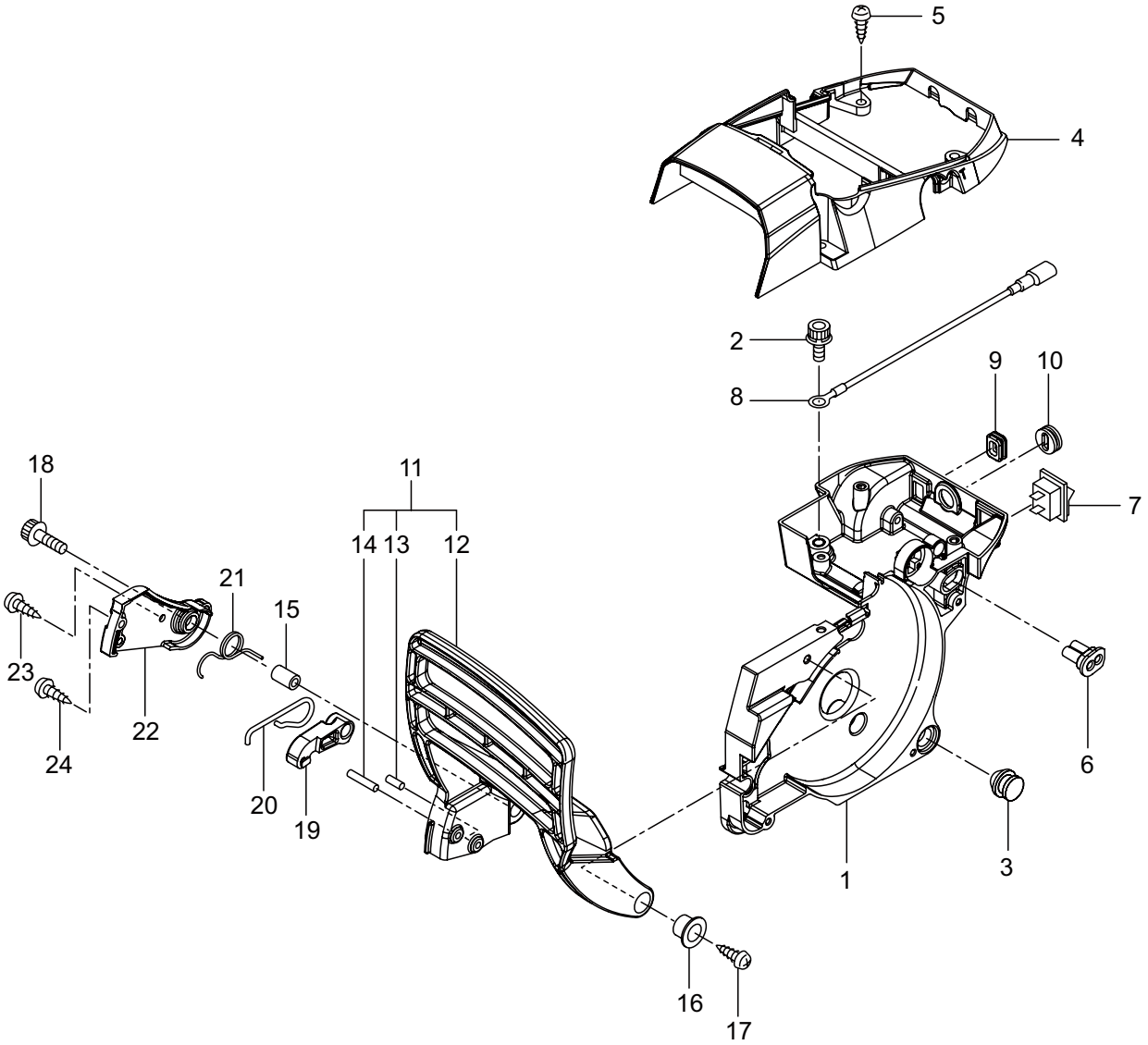

Ref. No.	Part No.	Part Name	Q'ty	Remarks
6-1	285939	Engine Case	1	
6-2	281714	Cap Screw	5	M5x20
6-3	285888	Cushion	1	
6-4	285942	Top Cover	1	
6-5	285636	Screw	3	M5x20
6-6	275459	Guide Rubber	1	
6-7	233643	Stop Switch	1	
6-8	272851	Lead	1	
6-9	285903	Grommet	1	
6-10	285926	Grommet	1	
6-11	272852	Front Guard Ass'y	1	Incl.12-14
6-12	285943	Front Guard	1	
6-13	272853	Pin	1	4x11.8
6-14	272854	Pin	1	4x23.8
6-15	272979	Collar	1	
6-16	285948	Cup	1	
6-17	272855	Screw	1	5x12
6-18	273204	Screw	1	M5x25
6-19	285944	Swing Arm	1	
6-20	285945	Arm Spring	1	
6-21	285946	Return Spring	1	
6-22	285952	Front Hand Guard Cover	1	
6-23	285644	Screw	1	M4x12
6-24	285631	Screw	1	M4x16

7. MCV3501S(16)-01
RECOIL STARTER

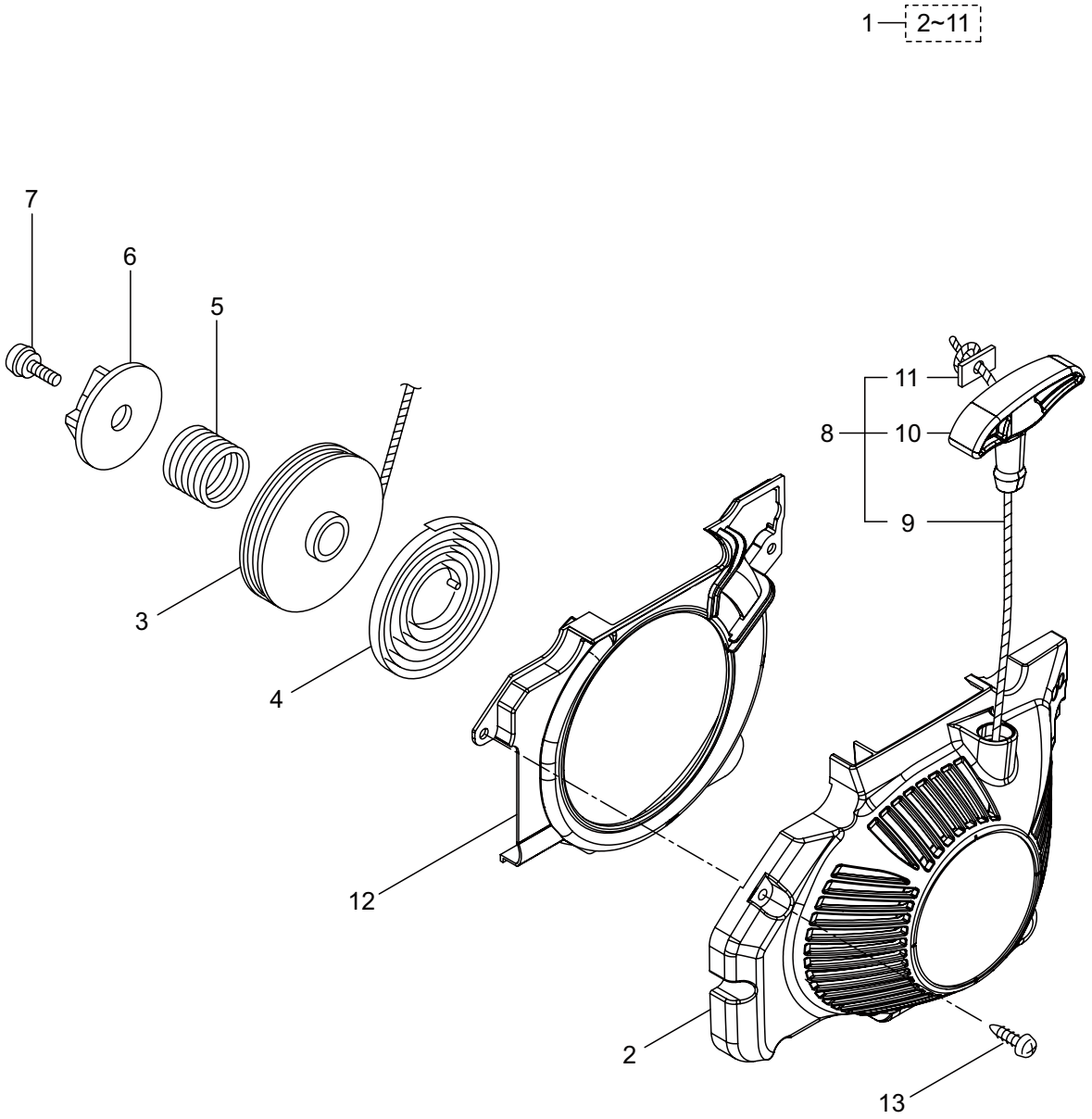

Ref. No.	Part No.	Part Name	Q'ty	Remarks
7-1	285940	Recoil Starter Ass'y	1	Incl.2-11
7-2	273094	Starter Case Comp	1	
7-3	272857	Reel	1	
7-4	283275	Spring Ass'y	1	
7-5	272858	Damper Spring	1	
7-6	285597	Cam Plate	1	
7-7	267213	Screw	1	
7-8	272859	Rope Ass'y	1	Incl.9-11
7-9	272860	Starter Rope	1	
7-10	285581	Starter Knob	1	
7-11	283281	Rope Stopper	1	
7-12	285941	Fan Cover	1	
7-13	285631	Screw	4	M4x16

8. MCV3501S(16)-01
HANDLE

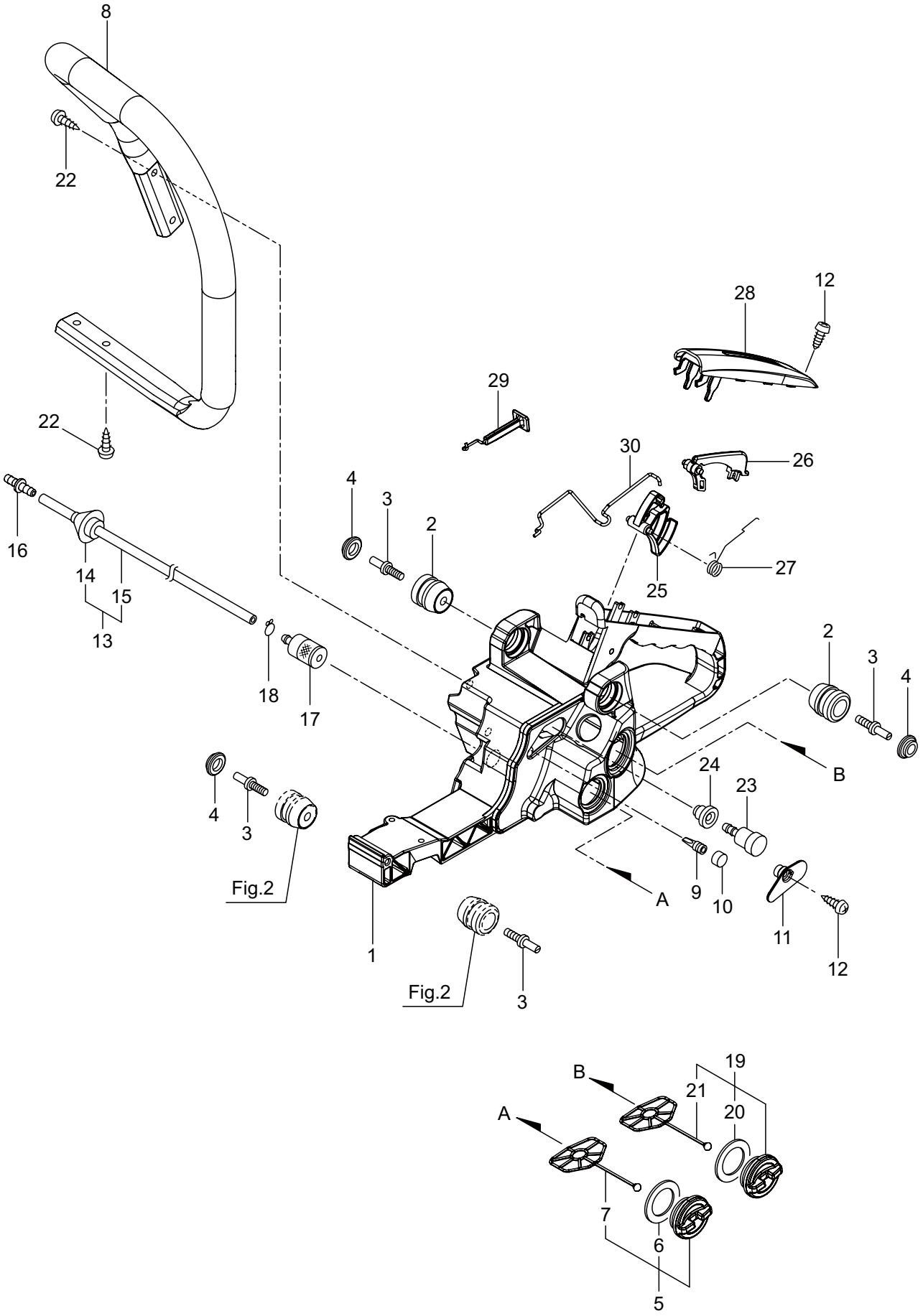

Ref. No.	Part No.	Part Name	Q'ty	Remarks
8-1	273563	Rear Handle Comp	1	
8-2	285582	Buffer	2	
8-3	285474	Stopper Bolt	4	
8-4	285473	Cap	3	
8-5	285501	Oil Cap Ass'y	1	Incl.6,7
8-6	285503	Packing	1	
8-7	285504	Holder	1	
8-8	285957	Front Handle	1	
8-9	285574	Breather	1	
8-10	285526	Element	1	
8-11	285953	Breather Cover	1	
8-12	285631	Screw	2	M4x16
8-13	273010	Oil Pipe C Ass'y	1	Incl.14,15
8-14	261339	Grommet	1	
8-15	273011	Oil Pipe C	1	
8-16	288618	Joint	1	
8-17	274017	Oil Filler Comp	1	
8-18	261117	Clip	1	
8-19	286051	Fuel Cap Ass'y	1	Incl.20,21
8-20	286063	Packing	1	
8-21	285504	Holder	1	
8-22	285636	Screw	4	M5x20
8-23	285832	Breather Ass'y	1	
8-24	285573	Breather Grommet	1	
8-25	285516	Throttle Lever	1	
8-26	285517	Safety Lever	1	
8-27	285518	Spring	1	
8-28	286642	Rear Handle Cover	1	
8-29	285925	Choke Rod	1	
8-30	285929	Push Rod	1	

9. MCV3501S(16)-01
LABEL, ACCESSORIES

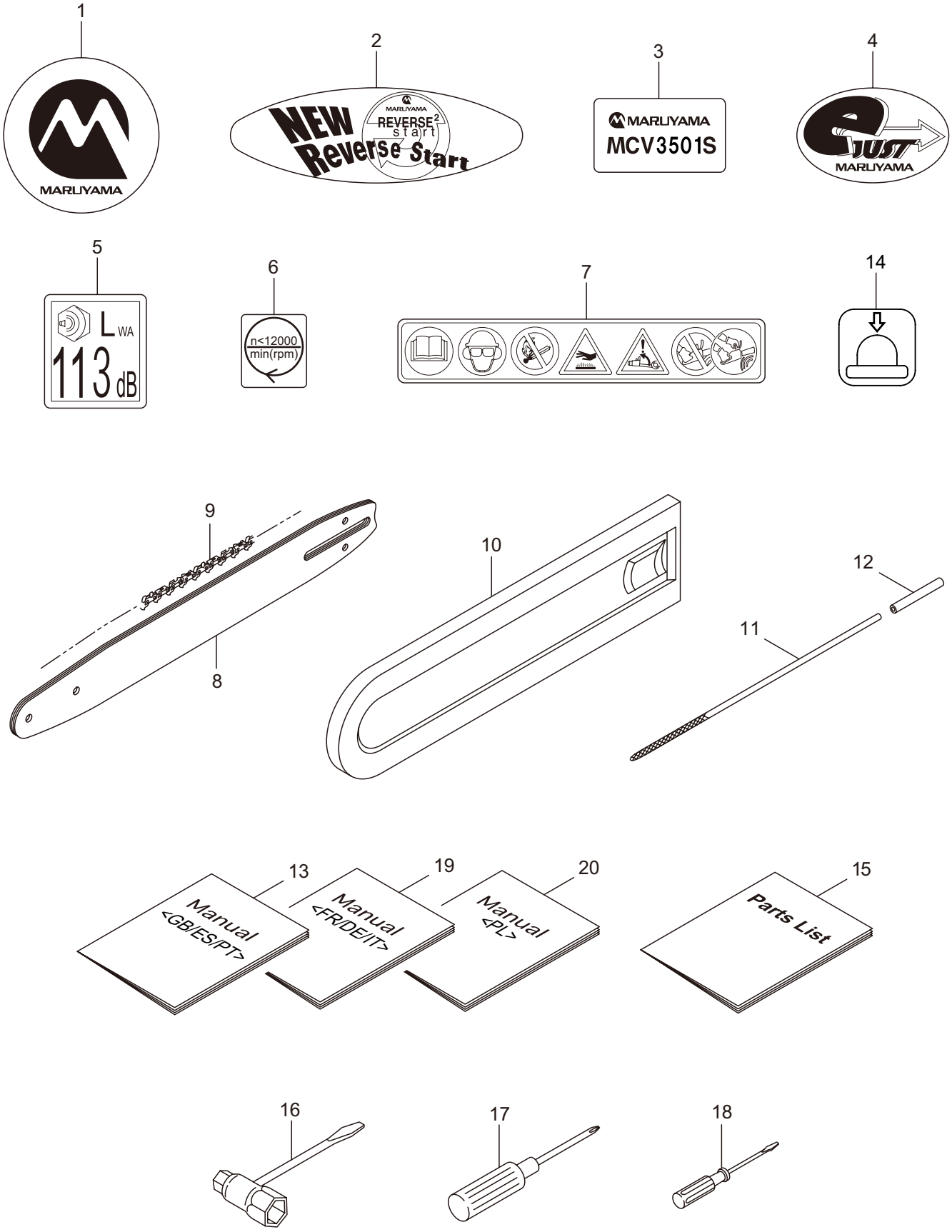

Ref. No.	Part No.	Part Name	Q'ty	Remarks
9-1	275243	Label	1	
9-2	287255	Label	1	REVERSE
9-3	275244	Label	1	
9-4	287160	Label	1	E JUST
9-5	275175	Label	1	
9-6	287616	Label	1	
9-7	287161	Label	1	
9-8	287395	Guide Bar	1	
9-9	289539	Chain	1	
9-10	287400	Chain Cover	1	
9-11	285729	File	1	
9-12	285730	File Grip	1	
9-13	275239	Instruction Manual	1	GB/ES/PT
9-14	272020	Label	1	
9-15	523938	Parts List	1	MCV3501S(16)-01
9-16	288652	Combi Box Spanner	1	13x19 L=190
9-17	285732	Screwdriver	1	
9-18	286865	Screwdriver	1	
9-19	275240	Instruction Manual	1	FR/DE/IT
9-20	275241	Instruction Manual	1	PL