ALPINA

APR 25 (2022)

202510024/A20

Spare parts list
Reservdelar
Repuestos
Ersatzteile
Pièces détachées
Reserve onderdelen
Catalogo ricambi

● Use ST. S.p.A. Genuine Spare Parts specified in the parts list for repair and/or replacement.
● The contents described in the parts list may change due to improvement.
● The drawings of the spare parts are only indicative And might Not represent the part in question exactly.
● The indications "right" - "left" - "front" - "rear" refer to the position of the operator when using the machine.
● When placing orders of parts for repair And/Or replacement, make sure that the illustrated parts list Is the one applying to the machine's year of manufacture, as shown on the identification plate attached to the machine.

All rights reserved. No part Of this material may be reproduced Or transmitted, in any form Or by any means, electronic Or mechanical, including photocopying, recording Or by any information storage And retrieval system, without permision in writing from ST. S.p.A.

Copyright ST. S.P.A.

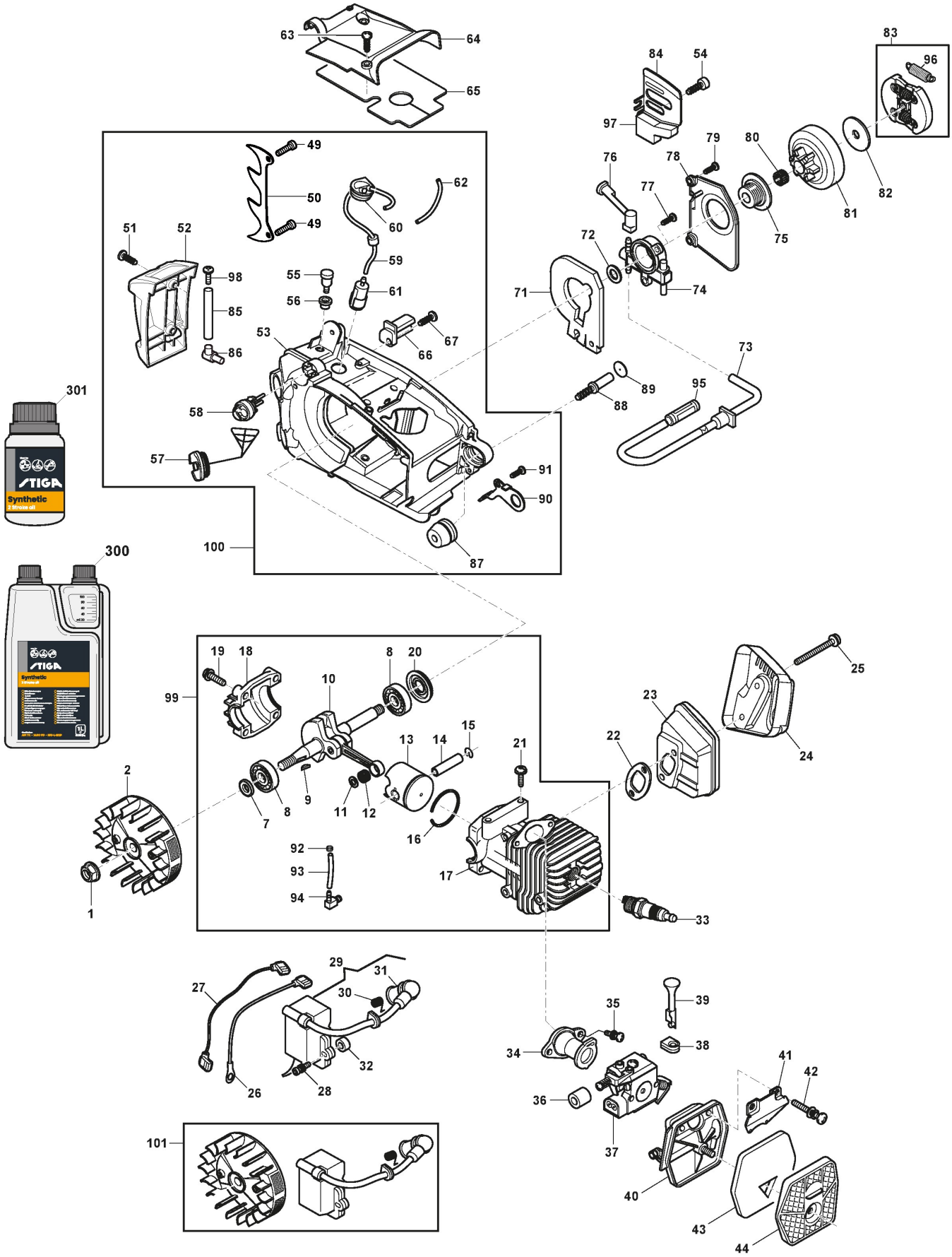

Copyright ST. S.P.A.

Engine

Ref.nr.	Qty	Item number	Description	Notes	From	Up to
1	1	123120008/0	Nut			
2	1	118805205/0	Flywheel Ass.Y			
7	1	119035162/0	Seal Ring			
8	2	114215219/0	Ball Bearing			
9	1	118800959/0	Key			
10	1	123020030/0	Crankshaft			
11	2	123652505/0	Washer			
12	1	123235008/0	Needle Bearing			
13	1	123590012/0	Piston			
14	1	123760006/0	Piston Pin			
15	2	123202006/0	Circlip			
16	1	123204014/0	Piston Ring			
17	1	118802730/0	Cylinder Assy			
18	1	123082006/0	Stabilizer			
19	4	123878076/0	Screw			
20	1	119035163/0	Seal Ring			
21	4	123878081/0	Screw			
22	1	123280067/0	Muffler Gasket			
23	1	118802733/0	Muffler			
24	1	118804648/0	Muffler Cover			
25	2	123878078/0	Screw			
26	1	6995210	Earth Cable			
27	1	6995227	Stop Wire			
28	2	123878079/0	Screw			
29	1	118805204/0	Electronic Coil			
30	1	3657050	Spark Plug Spring			
31	1	6995066	Spark Plug Cover			
32	2	123160063/0	Spacer			
33	1	3210024	Spark Plug			
34	1	123073516/0	Intake Manifold Assy			
35	2	123878077/0	Screw			
36	1	118801153/0	Sponge Gasket			
37	1	123054034/0	Carburetor			
38	1	123275025/0	Grommet Air-Lever			
39	1	123315093/0	Air Lever, Black			
40	1	118801588/0	Air Cleaner Base			
41	1	123543002/0	Plate			
42	2	123878086/0	Screw			
43	1	123220014/0	Air Filter			
44	1	118801589/0	Cleaner Cover			
49	2	123878122/0	Screw			
50	1	118550596/0	Spike			
51	2	123878008/0	Screw			
52	1	118801598/0	Front Cover, Black			
53	1	118802270/0	Crankcase Ass.Y	Black		
54	2	6995187	Screw			
55	1	183875003/0	Breather Valve Assy			
56	1	123275024/0	Grommet			

Copyright ST. S.P.A.

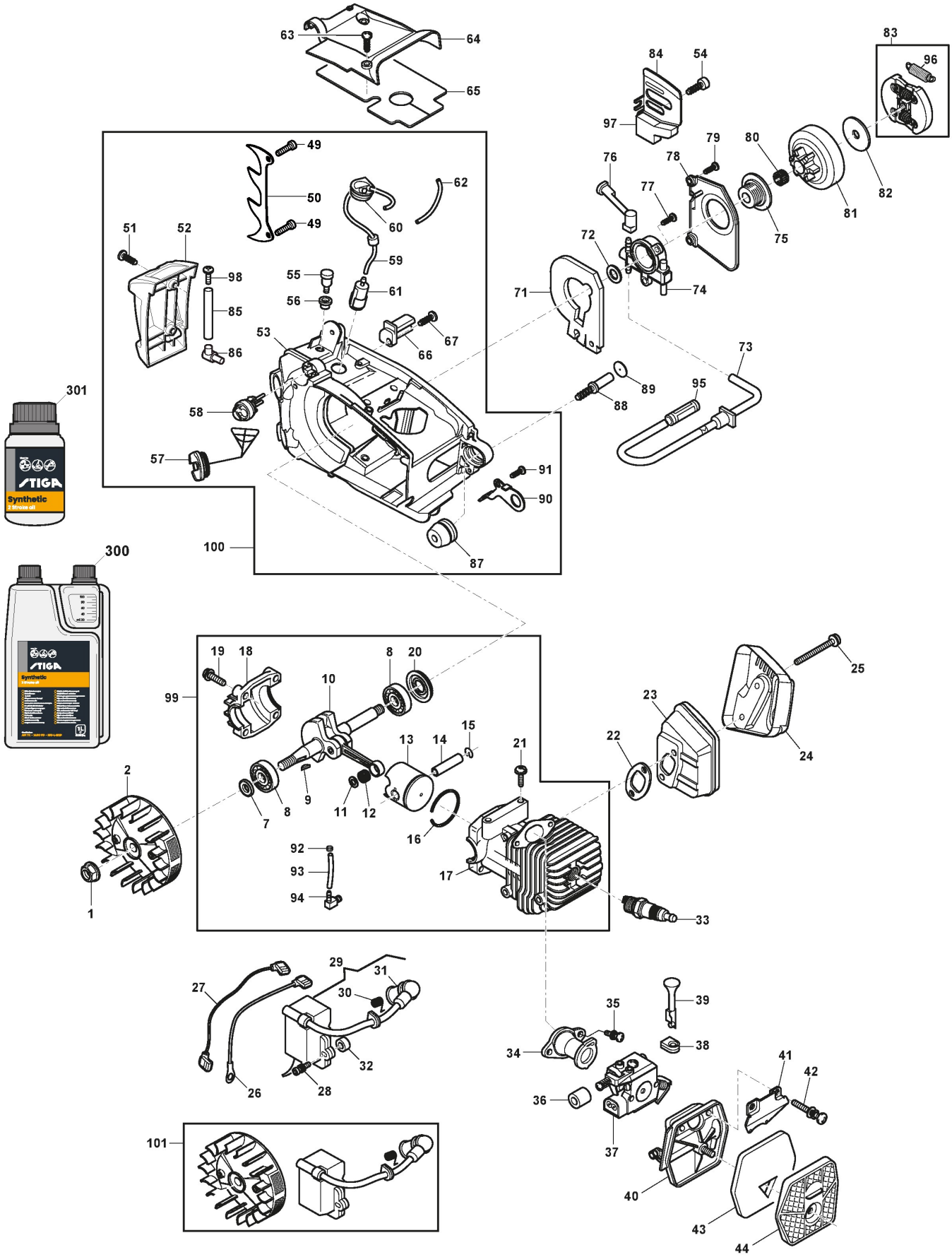

Copyright ST. S.P.A.

Ref.nr.	Qty	Item number	Description	Notes	From	Up to
57	2	118804552/0	Cap Assy, Black			
58	1	118804231/0	Primer			
59	1	123867019/0	Pipe			
60	1	123650004/0	Grommet			
61	1	183520007/0	Fuel Pickup Assy			
62	1	118801532/0	Pipe			
63	2	123878082/0	Screw			
64	1	118805231/0	Upper Cover, Grey			
65	1	123600072/0	Guard			
66	1	123202007/0	Chain Guard			
67	1	123878093/0	Screw			
71	1	123600073/0	Gasket			
72	1	123652506/0	Washer			
73	1	123867020/0	Pipe			
74	1	183594508/1	Oil Pump Assy			
75	1	123878083/0	Screw			
76	1	123867024/0	Pipe			
77	2	123878084/0	Screw			
78	1	123109577/0	Cover Pump			
79	2	123878080/0	Screw			
80	1	123235009/0	Needle Bearing			
81	1	123050007/0	Clutch Drum Assy	10"- 3/8		
82	1	123657011/0	Sprocket Washer			
83	1	183215008/0	Clutch Ass.Y			
84	1	123311009/0	Plate			
85	1	118800255/0	Pickup Oil			
86	1	118801162/0	Nozzle			
87	1	123275027/0	Shock Absorber			
88	1	123878093/0	Screw			
89	1	123790022/0	Cap, Black			
90	1	123208412/0	Clamp			
91	1	123878080/0	Screw			
92	1	123206852/0	Fair Led			
93	1	123867018/0	Pipe			
94	1	118803594/0	Joint			
95	1	123220013/0	Fuel Pickup Assy			
96	1	123430593/0	Clutch Spring			
97	1	123600074/0	Guard			
98	1	112728099/1	Screw			
99	1	118805206/0	Engine Short Block			
100	1	118804965/0	Base Components Assy	Only in Yellow		
101	1	118805312/0	Electroni Coil & Flywheel Assy	Flywheel + El. Coil [Euro-2]		
300	1	1111-9230-01	2 Stroke Synthetic Oil 1L Dozer			
300	1	1111-9243-01	Only for Italian Market	Solo per mercato Italiano/Only Italian Market		
301	1	1111-9231-01	2 Stroke Synthetic 0,1 Lt			
301	1	1111-9269-01	Only for Italian Market	Solo per mercato Italiano/Only Italian Market		

Copyright ST. S.P.A.

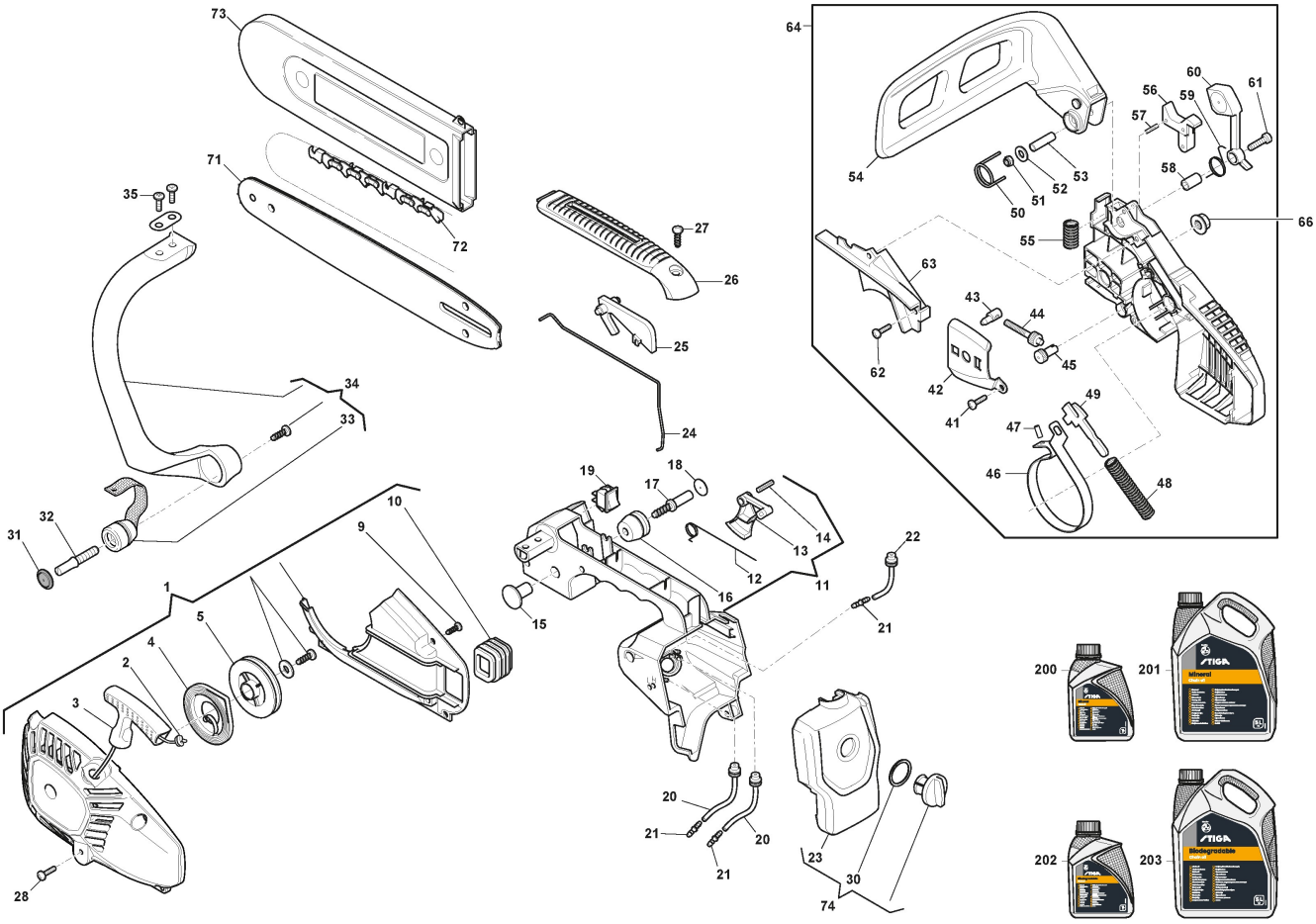

Copyright ST. S.P.A.

Housing

Ref.nr.	Qty	Item number	Description	Notes	From	Up to
1	1	118805234/0	Starter Assy Grey			
2	1	123234005/0	Starter Cord			
3	1	118805248/0	Starter Handle			
4	1	123430594/0	Starter Spring			
5	1	123604011/0	Starter Pulley			
9	1	123878088/0	Screw			
10	1	123275026/0	Grommet			
11	1	183300023/0	Handle Assy			
12	1	123430599/0	Spring			
13	1	123315095/0	Throttle Lever, Yellow			
14	1	123510098/0	Elastic Pin			
15	1	123790021/0	Cap, Black			
16	1	123275027/0	Shock Absorber			
17	1	123878093/0	Screw			
18	1	123790022/0	Cap, Black			
19	1	118800202/0	Switch			
20	1	123867022/0	Pipe Mix			
21	3	123650005/0	Pipe Connection			
22	2	123867021/0	Pipe			
23	1	118801590/0	Rear Cover			
24	1	123835002/0	Throttle Rod			
25	1	123315096/0	Safety Lever, Yellow			
26	1	118805232/0	Handle, Upper Part, Grey			
27	1	123878008/0	Screw			
28	4	123878008/0	Screw			
30	1	123657012/0	Washer			
31	1	123790022/0	Cap, Black			
32	1	123878093/0	Screw			
33	1	123275027/0	Shock Absorber			
34	1	183105000/0	Handle			
35	1	112728450/0	Screw			
41	1	123878088/0	Screw			
42	1	123311010/0	Bar Plate			
43	1	123796008/0	Chain Tightener Block			
44	1	123878092/0	Screw			
45	1	123510097/0	Pin			
46	1	123448005/0	Brake Band			
47	1	123665004/0	Needle			
48	1	123430598/0	Brake Spring			
49	1	123315094/0	Lever			
50	1	123430595/0	Spring			
51	1	112154330/0	Nut			
52	1	123657013/0	Washer			
53	1	123044219/0	Bushing			
54	1	118801594/0	Hand Guard			
55	1	123430597/0	Spring			
56	1	183315052/0	Chain Brake Lever			
57	1	123665003/0	Needle			

Copyright ST. S.P.A.

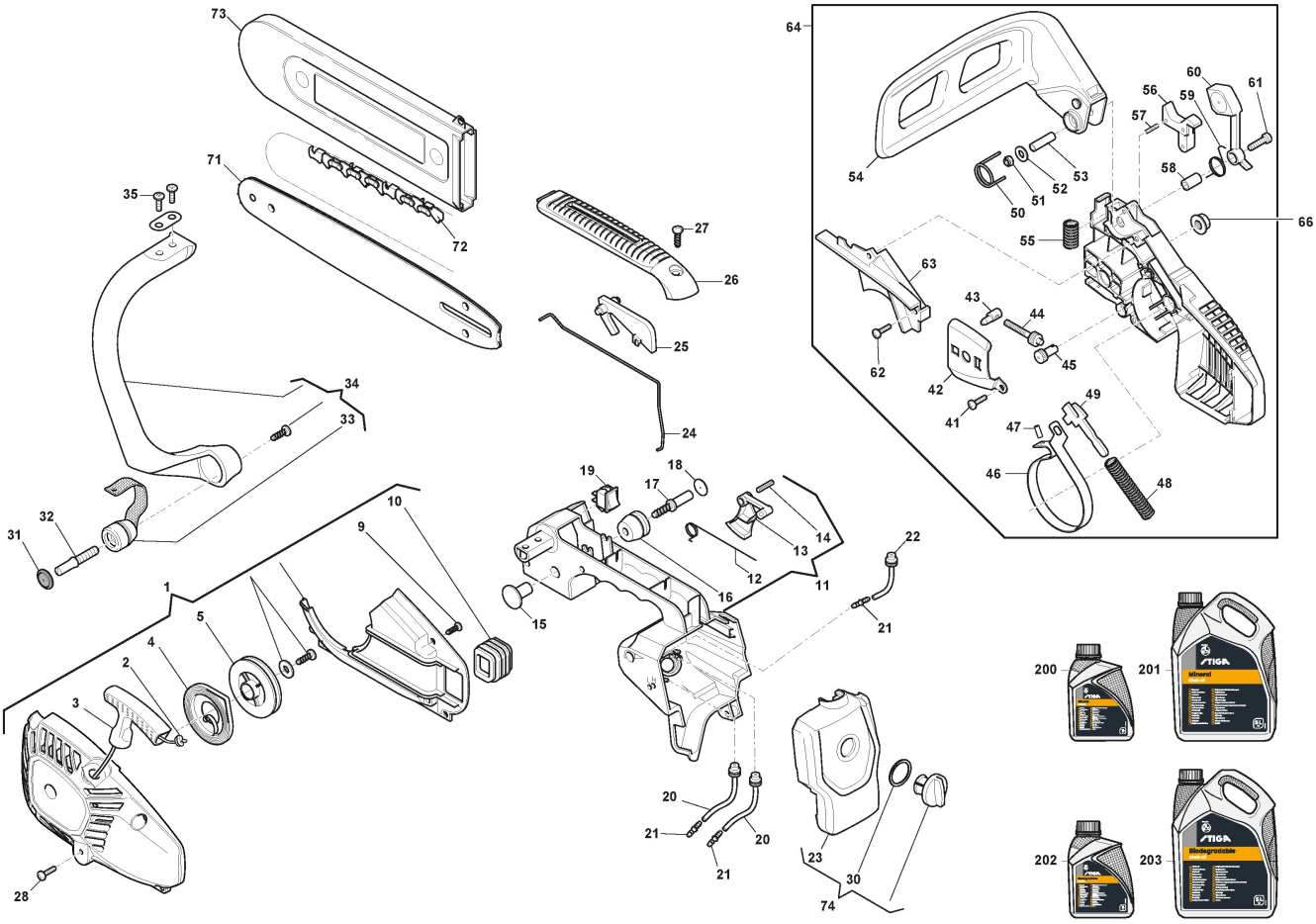

Copyright ST. S.P.A.

Ref.nr.	Qty	Item number	Description	Notes	From	Up to
58	1	123044220/0	Bushing			
59	1	123430572/0	Spring			
60	1	123080002/0	Balance Weigth			
61	1	123878090/0	Screw			
62	3	123878088/0	Screw			
63	1	123109578/0	Brake Spring Cover			
64	1	118805233/0	Brake Assy, Grey	Euro-2		
66	1	123120010/0	Nut			
71	1	123900360/0	Guide Bar 10"-3/8"-0,050"	10"- 3/8		
72	1	118801742/0	Chain 10inch	10"- 3/8		
73	1	323085000/0	Chain Cover			
74	1	118805230/0	Air Filter Cover Assy, Grey	Grey		
300	1	1111-9228-01	Chain Oil Mineral 1Lt			
300	1	1111-9267-01	Only for Italian Market	Solo per mercato Italiano/Only Italian Market		
301	1	1111-9229-01	Chain Oil Mineral 5Lt			
301	1	1111-9268-01	Only for Italian Market	Solo per mercato Italiano/Only Italian Market		
302	1	1111-9276-01	Chain Oil Biodegradable 1lt			
302	1	1111-9328-01	Only for Italian Market	Solo per mercato Italiano/Only Italian Market		
303	1	1111-9247-01	Chain Oil Biodegradable 5lt			
303	1	1111-9247-02	Only for Italian Market	Solo per mercato Italiano/Only Italian Market		

Copyright ST. S.P.A.